AmeriWater
The Water Purification Specialists

Operation & Maintenance Manual

Centurion Plus Heat Disinfection System

3345 Stop 8 Rd, Dayton, OH 45414 | 800 535 5585 | www.ameriwater.com
Manufactured With Pride in The USA

098-0007 Rev B

Table of Contents

1 GENERAL INFORMATION

1.1 Preface

This ***Operation & Maintenance Manual*** provides information required for trained renal technicians to use the device and perform the basic service and maintenance required on the Centurion Plus Heat disinfection device.

Please read and understand all of the instructions carefully prior to using the device or carrying out any service or repairs.

CAUTION: No person should attempt to operate or service the AmeriWater Centurion Plus Heat Disinfection System without prior authorization, instruction, and training from AmeriWater and/or your medical facility director.

1.2 Intended Use

The AmeriWater Centurion Plus Heat disinfection system is an optional accessory that can be paired with compatible portable reverse osmosis (RO) systems intended for use in hemodialysis applications to disinfect the hose between the RO and the hemodialysis machine. The AmeriWater Centurion Plus Heat disinfection device is designed to heat water received from the portable RO to 185 degrees Fahrenheit to disinfect the hose. The AmeriWater Centurion Plus Heat disinfection device is intended for use in hospitals, clinics, or dialysis centers to provide heat disinfection of the hose resulting in total viable microbial counts below 50 CFU/ml.

NOTE: All patients must be offline and removed from the general area prior to beginning the disinfection cycle. The RO water supply for the hemodialysis machine will be interrupted for approximately 10 minutes at the beginning of the cycle as the storage tank fills.

1.3 Contact Information

Please read the Operations Manual before using the system. Contact AmeriWater Customer Service with any questions at 1-800-535-5585 Monday through Friday 8:00 a.m. to 5:00 p.m. eastern standard time. For after hours emergencies call 1-800-535-5585 and follow the instructions on the recorded message. Our on-call technician will return your call as soon as possible. This entire Operations Manual should be read before operating or servicing the system. This Operations Manual should then be kept near the system and used as a reference and troubleshooting guide.

2 HEALTH & SAFETY

WARNING: This symbol is used to alert the user not to take a certain action, which if taken could cause a potential hazard and result in a serious adverse reaction, injury or even death. The warning symbol may also be used to alert the user to take a certain action to avoid a potential hazard. In all cases within this document, where this symbol is used it is important that you familiarize yourself with the nature of the potential HAZARD and any action that needs to be taken.

NOTE: A reminder or useful information that can be used to help explain a command or action or give guidance

2.1 Cautionary Labeling

There are a number of labels applied to the Centurion Plus Heat disinfection device which identify potential hazards to a user or service technician. See the list below for information regarding each label found on the device.

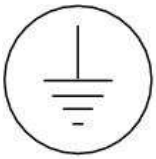

Earth Ground Terminal

Risk of electrical shock. Authorized service personnel only

Hot Surface: This label is used to warn users that the surface may be hot to the touch during a disinfection cycle. Caution should be used when using the system with the side covers removed

Caution: This symbol is used to warn user to take caution when using the device. The user should refer to this manual to understand how to responsibly use the device

2.2 Rear Panel Labels

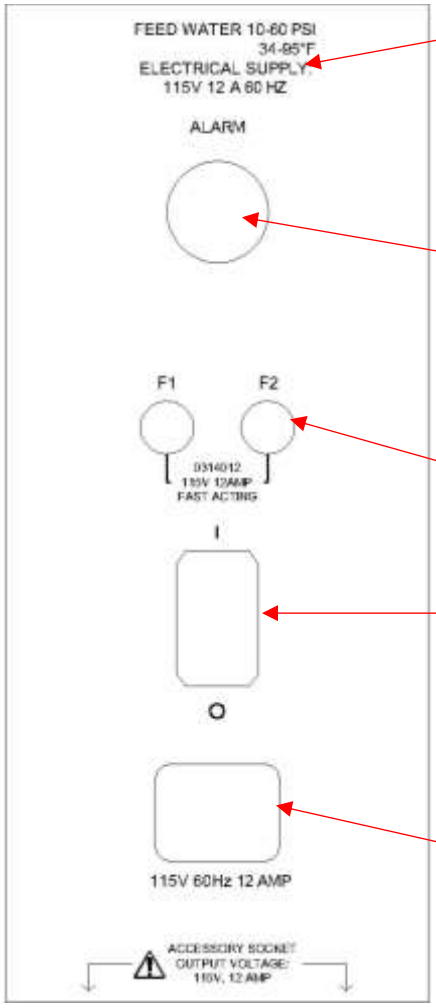

Feed Water and Electrical Supply information is listed at top of label.

Alarm will sound when an alarm condition is detected by the system controller.

The label identifies the location of the Mains fuses for the system. Detailed information about the fuses can be found in **Section 5.2.4.**

Mains ON/OFF Rocker Switch
I=Power On
O=Power Off

The mains power cord will be connected at this point. This will supply the power for the Centurion Plus Heat disinfection device as well as the any system connected to the Power outlet located behind the block off plate on the rear panel. See **Section 5.2.3** for more information on the electrical requirements for the device.

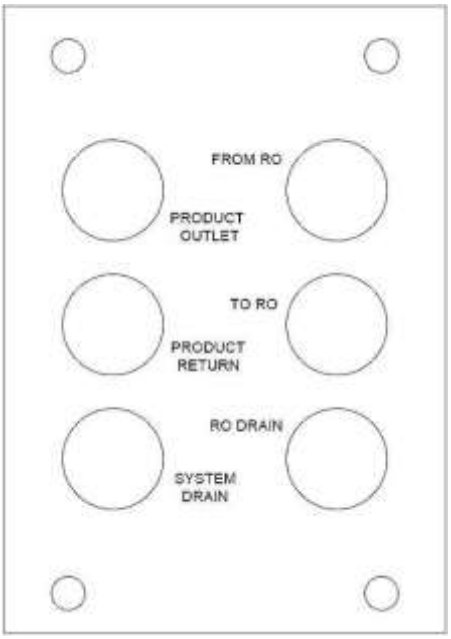

From RO	Connection for product water outlet from RO
To RO	Product water recirculation connect for Centurion. If connected to an RO which does not recirculate Product water, plug this connection
RO Drain	Connect the RO reject line. Reject water will pass through Centurion Plus to common drain outlet
Product Outlet	RO product water outlet to HD machine
Product Return	Unused RO product water return from HD machine
System Drain	Common drain outlet for RO and Centurion Plus Heat disinfection device

2.3 Safety Considerations

Requirements, standards and regulations specific to the country in which the unit is used must be observed. Contact the local regulatory body for confirmation of these regulations and standards.

WARNING: The device is not intended to be used in the following situations:

- Oxygen rich environments
- Intended for indoor use and must not be washed down
- Must not be allowed to freeze
- Always operate in well ventilated area and ensure the rear fan is not blocked during operation
- **DO NOT** sit or stand on the device
- Do not remove the side covers from the device while it is connected to a mains power supply unless you are properly trained to service or repair the system
- The system shall only be serviced by **AmeriWater** or suitably trained/authorized technician
- Failure to observe the instructions provided in this manual may compromise the safety performance and reliability of the system and may void any warranty
- The system must only be used as described in the "**Intended use**" description located in **Section 1.2**

2.4 Residual Dangers

WARNING: The following dangers may be present if operating the system with the side covers removed.

- **Electrical Shock:** With the side covers removed, the control system for the device will be exposed. 120 VAC, 24 VDC and 12 VDC power supplies are all contained within the device. Take necessary precautions to avoid shock when servicing the or maintaining the system.
- **Mechanical Force:** With the side covers removed and the system operating, some parts of the system may be under pressure up to 70 PSI.
- **Hot Surfaces:** During heat disinfection, some of the internal surfaces will become hot to touch. Take extra care if performing a disinfection cycle with the side covers removed.

2.5 Handling

This device is intended to be used as a stationary device. Do not move the device while in operation. Prior to moving the device, refer to the decommissioning procedure listed in **Section 4.11, Decommissioning for relocation**. The dry weight of the system is 57 lbs. Take care when lifting the system on or off of the transport cart.

When moving the system, be sure the water tank is empty. To manually drain the water tank if full, refer to **Section 7.5.2**.

2.6 Bringing the unit to an Immediate STOP

If you need to stop the unit immediately at any time, switch the rocker switch located at the rear of the system off at any time. As a precaution, shut the RO system down to shut off the water supply to the Centurion Plus Heat disinfection device. Refer to the RO manual for detailed information on bring the RO to an immediate stop.

DO NOT restart the unit until it has been verified to be safe for operation. If the original fault that required the unit to be shut down cannot be resolved, contact **AmeriWater** for assistance. Contact information can be found in **Section 1.3.**

2.7 Dealing with leaks from the unit

In the event that a leak forms inside the unit, shut the system down using the rocker switch on the rear of the unit. If the leak occurs while the unit is in "**Standby**" mode, the RO can be disconnected from the Centurion Plus Heat disinfection device to continue patient treatment until a certified technician can address the leaking component.

If water leaks outside of the system, the water should be cleaned immediately. If the water cannot be cleaned immediately, it is strongly recommended that a "Caution Wet Floor" sign is placed near to device to warn people of a potential slip hazard.

2.8 Unauthorized conversion and manufacturing replacement parts

DO NOT under any circumstances modify, or replace parts inside of the device with unauthorized parts or attempt to change or alter the functionality of the device. Installation of unapproved components may void the warranty of the device

WARNING: The Centurion Plus Heat disinfection system should be used in accordance with **Section 1.2, Intended Use**. The device is to be maintained and operated according to this operation

manual. **AmeriWater** will not accept liability for any damage or injury resulting from improper use, maintenance, unauthorized repair or use of any unapproved parts.

2.9 Warranty claims and liability

This product is covered under the standard AmeriWater warranty policy. For specific terms and conditions contact your AmeriWater sales Representative.

3 ABOUT YOUR CENTURION PLUS HEAT DISINFECTION DEVICE

3.1 General Views

Front View

Side View

Rear View

*Refer to **Section 6.1** for component identification

3.2 Overview

The ***Centurion Plus Heat Disinfection Device*** has been designed to pair with a portable RO system in order to heat disinfect the Hemodialysis machine feed water hose. This section of hose is typically not included in the disinfection of the RO system or Hemodialysis machine. The device will act as a pass through unless the user enables a disinfection. The device is capable of heating 11 L of water to 185 °F and dispensing that water @ 1 L/min. A disinfection cycle is typically 1 hr from start to finish.

The device contains an internal storage tank, pump and series of valves to fill its internal tank and heat the water up to the desired disinfection temperature. Upon reaching the disinfection set-point, the device will send hot water to the Hemodialysis machine which should be in rinse mode. The Hemodialysis machine will rinse with hot water for at least 10 min to complete a disinfection. If the ***Centurion Plus Heat disinfection*** device detects that water is being used at a rate greater than expected (i.e. the user did not connect the Hemodialysis machine) an alarm condition will occur stopping the disinfection cycle to prevent 11 L of hot water to leak from the device.

3.3 Detailed description of disinfection process

The ***Centurion Plus Heat Disinfection Device*** is intended to act as a pass through device while a disinfection cycle is not in process. The RO product water enters the Centurion Plus Heat disinfection device through the inlet connection on the rear of the system. The RO product water then passes through a Normally open valve and 3 way valve. The RO product water then leaves the device through the product water outlet connection to feed the Hemodialysis machine. Water that is not used by the Hemodialysis machine is then recirculated back into the Centurion Plus Heat disinfection device then back to the RO system. The RO reject water is connected to the reject water inlet on the rear of the device. The RO reject water passes through the system and then to a common system drain.

The Centurion Plus Heat disinfection device contains a 120 VAC outlet which is located behind the block off plate at the rear of the device. This plug is intended to be used to power an AmeriWater Centurion system. The Centurion Plus Heat disinfection device monitors the current draw from the AmeriWater Centurion device to prevent both systems from performing a heat disinfection at the same time. A current switch will open when the current draw exceeds 10 A. this current switch will prevent the heating element inside the Centurion Plus Heat disinfection device to turn on.

When a disinfection cycle is initiated, the Centurion Plus Heat disinfection device will activate the tank fill solenoid valve (SV1) to fill the storage tank with 11 L of water. This water will then begin to heat to the disinfection temperature set-point. The feed RO can remain in operation during a Centurion Plus Heat disinfection. When the disinfection set-point is reached, the device will turn the pump output on and dispense the hot water to the Hemodialysis machine @ 1 L/min. During the dispensing mode, the Hemodialysis machine must be in a suitable rinse mode to accept the hot water. Upon completion of the dispensing mode, the system will enter drain mode to purge any remaining water. Then the system will return to standby and display a "**Disinfection Complete**" message on the display. If an alarm condition is detected, the device will automatically return to standby and shutoff all outputs.

NOTE: Reference flow schematic in **Section 6.3.**

4 INSTALLATION & COMMISIONING

4.1 Checklist

Step	Item	Section Ref
1	Verify all items are included	0
2	Place on cart with RO	4.3

3	Check Operating Environment	4.4
4	Check Water Services	4.5
5	Check Electrical Services	4.6
6	Check default settings/adjust as required	7.6
7	Set/Check time and date	4.7
8	Connect to RO	4.8
9	Perform disinfection cycle	4.9
10	Electrical Safety Check	10.2
11	Pre-dialysis checks	4.10
12	End user Training	N/A

4.2 Packing List

Part Number	Item	QTY	Notes
000-HS120	Centurion Plus Heat disinfection Device	1	
000-090-0001[2]	Extended pretreatment cart-complete with filters	1	
090-0032[2]	Extended pretreatment cart-bare (no filters)	1	Only included with the existing Centurion retrofit kit. Reuse filter assembly from existing Centurion cart
001-999-0009[1]	Installation kit	1	Includes items shown below
055-0002	VALVE, CHECK, 35 PSI CRACKING, 20-65 PSI ADJUSTABLE, 1/4" FNPT, SS, GENERANT (Centurion P17 valve)	1	Only included with the existing Centurion retrofit kit
055-0001	VALVE, CHECK, 25 PSI CRACKING, 20-65 PSI ADJUSTABLE, 1/4" FNPT, SS, GENERANT (Centurion P18 valve)	1	Only included with the existing Centurion retrofit kit
66-0181	Mains Power cord	1	
010-0175	PLUG IN ELBOW,5/16" STEM X 5/16" T, LIQUIFIT	6	
08-0025	TUBING, FEP 8MM O.D X 6MM I.D. CLEAR	3	3 individual labeled sections should be included.

[1]Install kit is included with Centurion Plus Heat disinfection device
[2]Cart assembly may be purchased as a complete assembly with pretreatment filters installed or as a bare cart which requires the user to reuse the filter assembly from an existing MROC pretreatment cart.

4.3 Installation on Centurion Pretreatment cart

The Centurion Plus Heat Disinfection Device is designed to be installed onto a cart with the AmeriWater MROC Heat Disinfection RO system. The Cart contains the sediment and carbon filtration required for the RO system to perform as intended. The following steps are required to install the Centurion Plus Heat disinfection device onto the Cart along with the MROC.

a) Remove the right hand side cover on the MROC and check the P17 and P18 check valves that are installed in the device. If the valves are stamped ACV-4FFSS-V-15 and ACV-4FFSS-V-20, proceed to the next **step**, if the valves are stamped ACV-4FFSS-V-25 and ACV-4FFSS-V-35, proceed to **step d**.

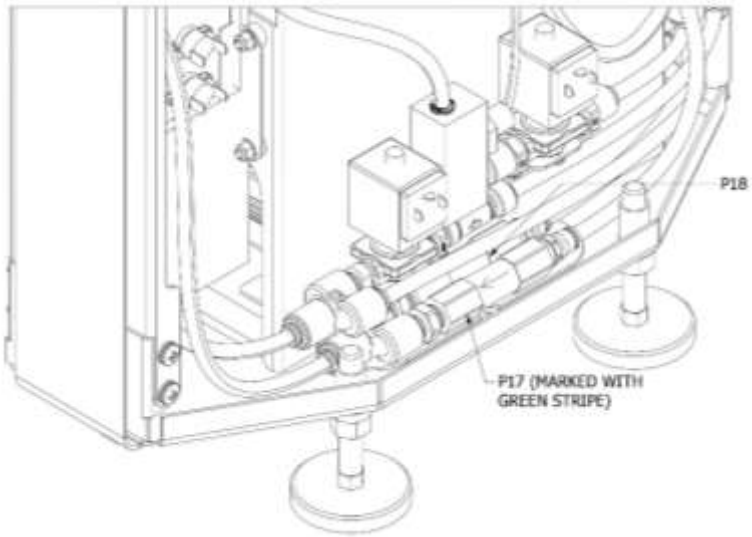

b) Disconnect the tube connections shown and remove the existing check valves. Water will leak from the Y connector when disconnected. Be sure to drain water out of lower pan of Centurion after removing the valves.

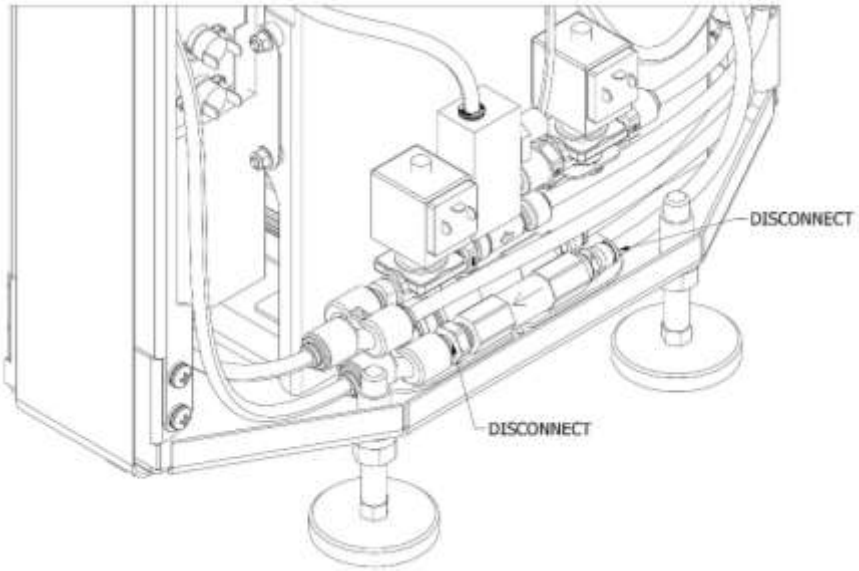

c) Install the check valves included with the install kit. The valve labeled ACV-4FFSS-V-35 must be installed on the permeate return to tank line as shown. Failure to do this will cause the RO product water to be diverted to the break tank on the RO.

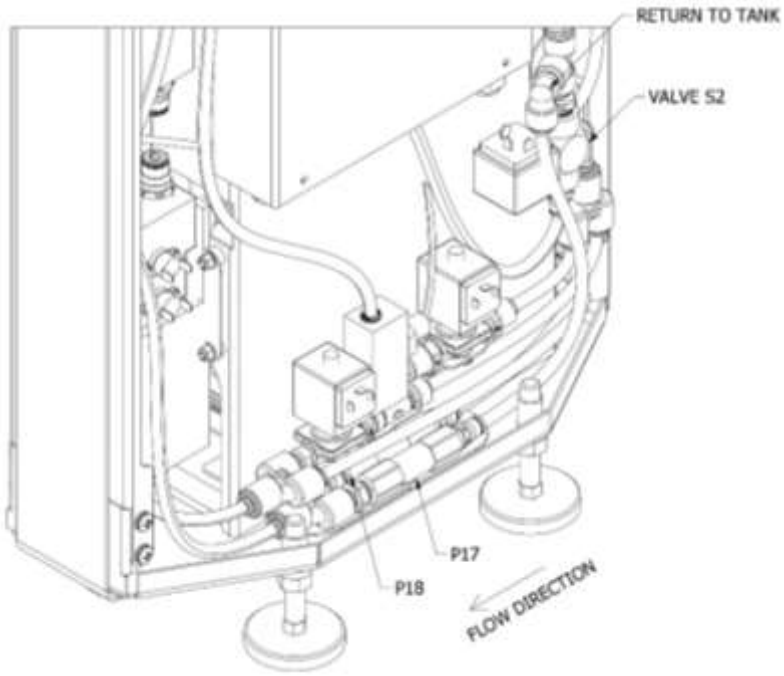

d) With the check valves installed, reinstall the side cover ontop the MROC .

e) Place the Centurion Plus Heat disinfection device onto the pretreatment cart in the location shown. Align the feet of the device with the slots on the cart and slide the device into the slots. See figure below

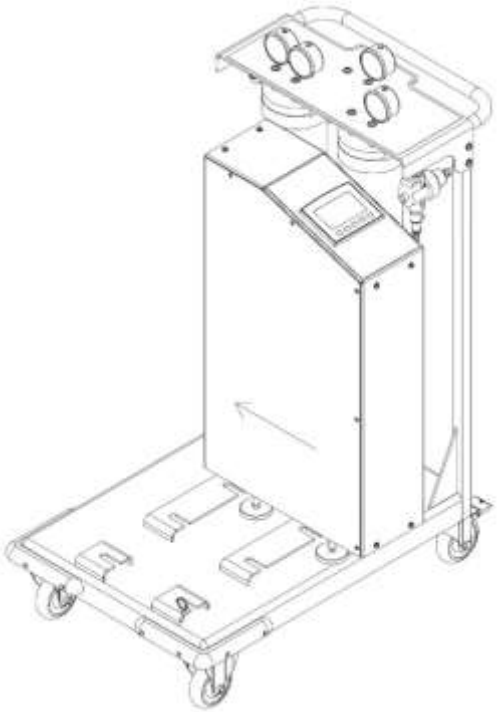

f) Install the locking pin as shown below.

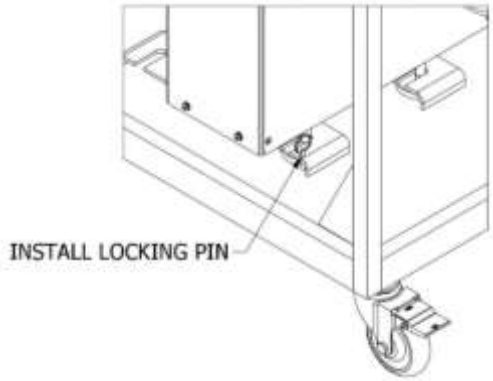

g) Place the MROC onto the pretreatment cart as shown. Use the locking pin to secure the foot of the system. Assembly should

h) Install the water connections as detailed in **Section 4.5.1**.

4.4 Environment

The device should be used indoors on a firm, flat level surface in a clean and dry environment. The device should be operated in a well ventilated area. Take care when making water and power connections to the rear of the device as to not create tripping hazards. Refer to **Section 2.3** for safety considerations when installing the Centurion Plus Heat disinfection device.

4.5 Checking Water Services

The Centurion Plus Heat disinfection device will use a portable RO system as the feed water supply. The RO system must be capable of being connected to an 8mm/5/16" push-fit connection. It is recommended that the RO have a recirculation line back from the Hemodialysis machine.

The Centurion Plus Heat disinfection system will accept the reject water from an RO using an 8mm/5/16" push-fit connection. The reject water will pass through the Centurion Plus Heat disinfection device to a suitable drain. The Reject water will require a suitable drain. See **Section 5.2.2** for drain requirements.

WARNING: **The drain must be capable of handling water that could be up to 203 °F.**

4.5.1 Water connection detail

NOTE: Water connections should be placed such that they are not facing the operator during disinfection cycle.

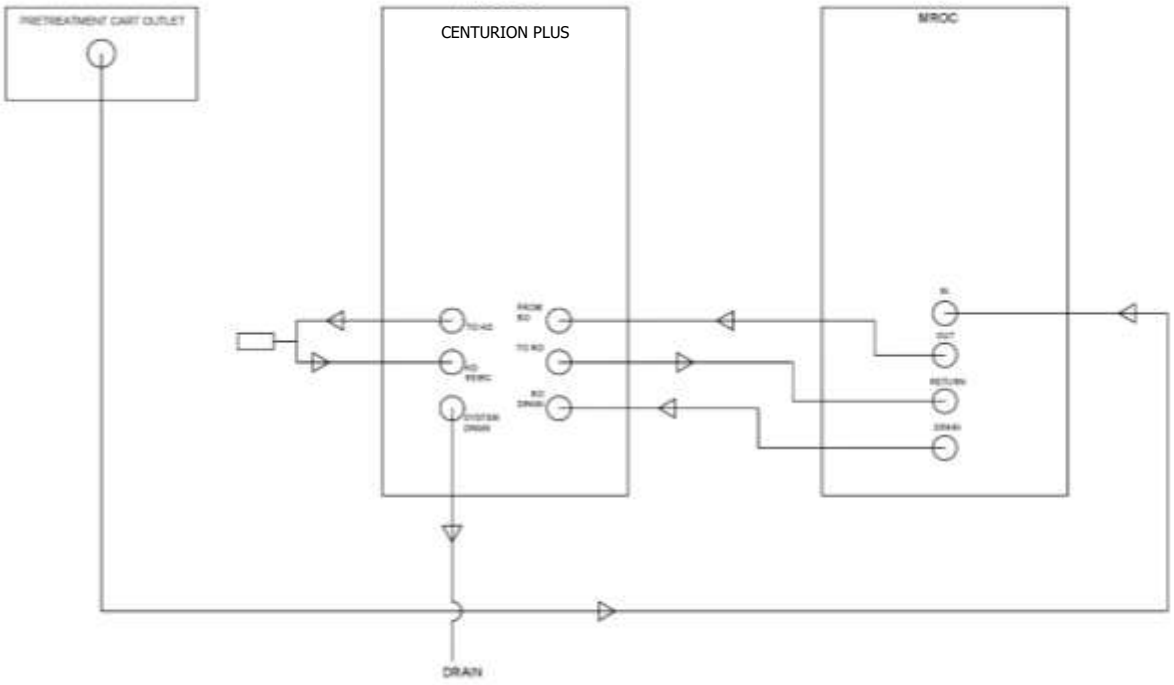

4.6 Checking Electrical Services

WARNING: To reduce the risk of electric shock, this equipment must only be connected to a supply main with protective earth connection. Always refer to local code for electrical connections. Refer to **Section 5.2.3** for details on the electrical requirements for the device.

Once the proper electrical supply for the device is in place, plug the device into the wall outlet using the supplied detachable mains power cord. Power the device on using the rocker switch at the rear of the device. The splash screen shall appear for 10 seconds and then the device will display the home screen.

WARNING: Only use the included mains power cord or an AmeriWater approved alternative. Use of an inadequate mains power cord may result in damage to the equipment.

4.7 Setting Time and Date

The Centurion Plus Heat disinfection device will arrive set to **Eastern Standard Time**. The device will **NOT** auto update for daylight savings time. To adjust the date and time displayed, use the following steps:

- On the home screen, press the time in the upper left hand corner of the display.

- Pressing the time will prompt the user with the following "**clock adjust**" menu. Pressing the "+" and "-" buttons will adjust the current time.
  NOTE: Time will be shown in 24 hr format.

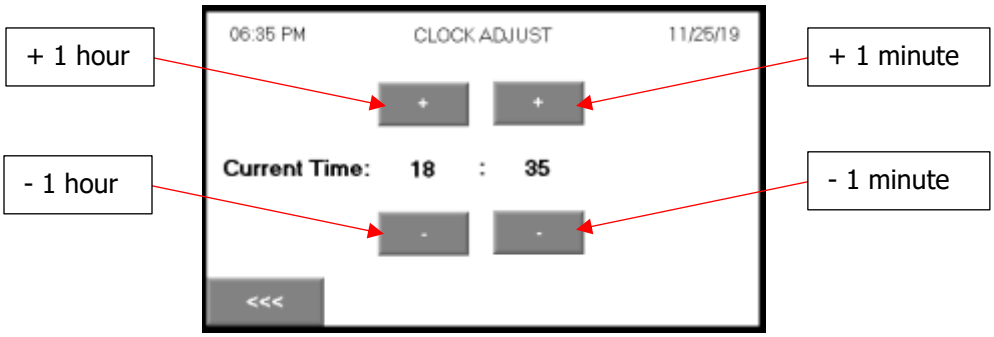

- Press the arrow in the lower left hand corner to return to the home screen.
  - From the home screen press the date located in the upper right hand corner.

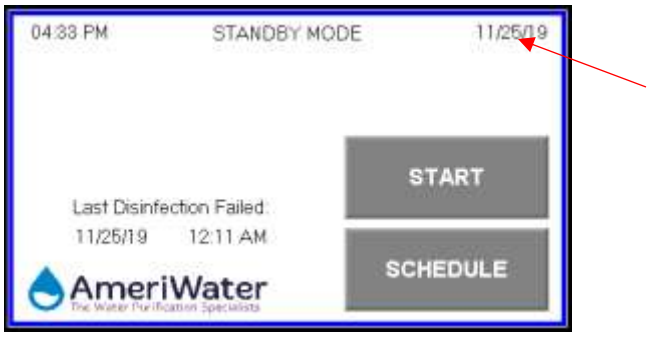

- Pressing the date will prompt the user with the following "**date adjust**" menu. Press the date in the middle of the display and enter the current date.

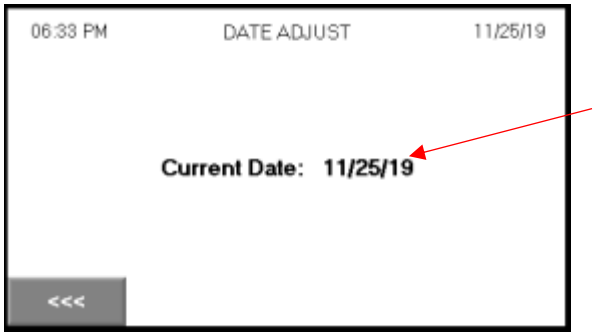

- Press the arrow in the lower left corner of the display to return to the home screen.

4.8 Connection to RO

All of the fittings required to connect the Centurion Plus Heat disinfection device to an AmeriWater Centurion RO system are included in the installation kit for the device. The tubing sections included with the installation kit will be labeled with the connection location for ease of install. The Centurion Plus Heat disinfection device will be placed on the extended Centurion pretreatment cart as shown in **Section 4.3**.

Use the 10" sections of clear tubing (AmeriWater PN 08-0025) and plug-in elbow fittings (010-0175) to connect the Product outlet, product water recirculation and drain connection from the Centurion to the Centurion Plus Heat disinfection device as shown below:

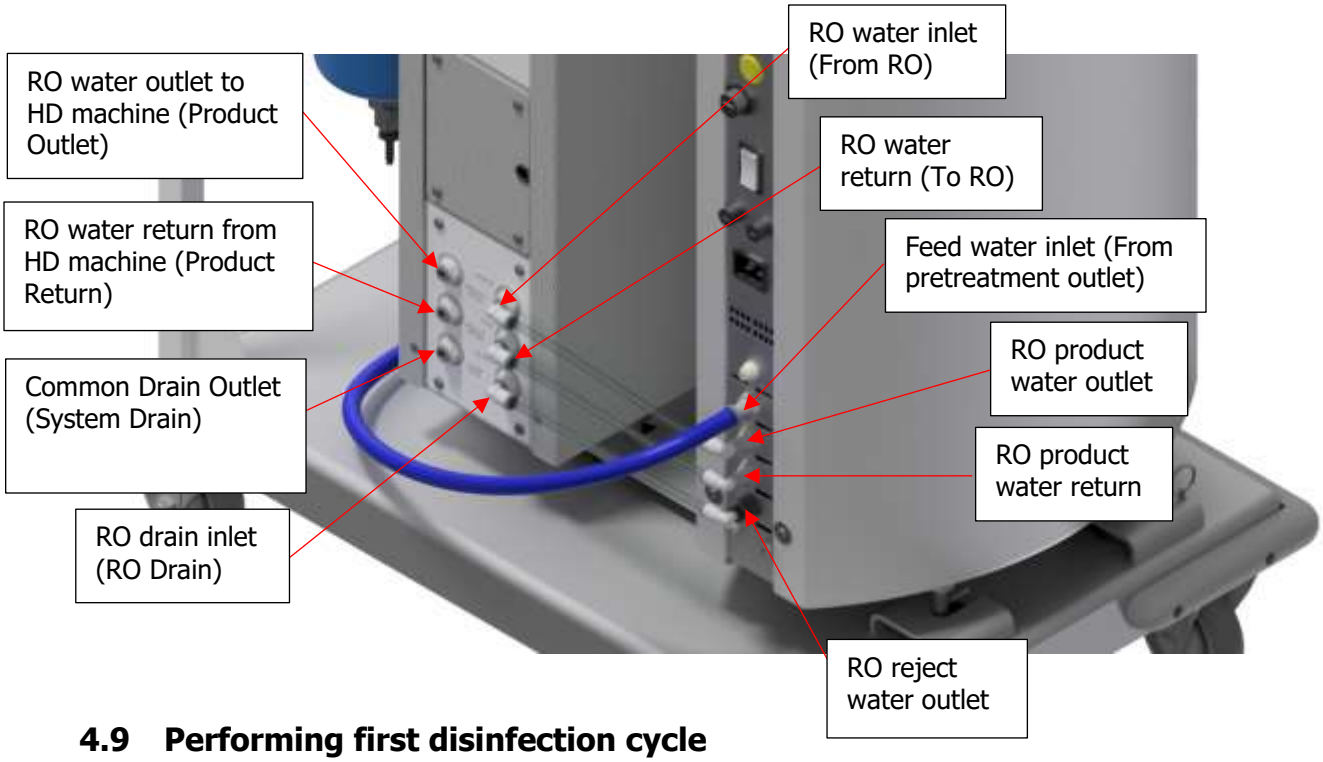

4.9 Performing first disinfection cycle

Prior to commissioning the Centurion Plus Heat disinfection device for dialysis use, an initial disinfection cycle shall be preformed to ensure the system functions as intended. All Centurion Plus Heat disinfection devices are functionally tested by AmeriWater prior to shipment. Refer to **Section 8.3** for detailed information on performing a disinfection using the Centurion Plus Heat disinfection device.

4.10 Pre Dialysis Checks

Prior to using the device for dialysis treatment, it is recommended that the following checks are preformed to verify the device will function as designed:

- Check that the electrical mains lead is securely inserted in place on the unit and at the wall socket. Verify that the lead is not damaged or likely to cause anyone to trip over it.
- All the water connections are in place, not kinked and show no signs of leaks.
- The **"Blue"** water tubing is connected to the **"In/Entreé"** port (Centurion), the **"Black"** water tubing is connected to the **"System Drain"** port (Centurion Plus Heat disinfection device).
- The water supply is turned on to the Centurion.
- There are no warning messages displayed on the touch-screen. (Refer to **Section 11**, if any alarm or warning messages are displayed.
- Water should pass through the Centurion Plus Heat disinfection device as if it were not installed while the Centurion is operating and the Centurion Plus Heat disinfection device is not in a disinfection cycle.
- Check that the Centurion is operating properly before attempting to use the RO with the Centurion Plus Heat Disinfection device.

4.11 Decommissioning for Relocation

Prior to moving the Centurion Plus Heat disinfection device, the following steps should be followed to ensure the device is safely transported.

- Ensure the device is in "Standby Mode" and on the Home Screen.

- Verify that the tank is empty by activating the "**Manual Drain**" mode (refer to **Section 7.5.2** for entering the manual drain mode).
- Turn off the Centurion following the shutdown procedure listed in Operation manual 98-2022.
- Turn off the Feed water supply to the RO system.
- Turn off the Centurion Plus Heat disinfection device using the rocker switch at the rear of the system.
- Disconnect tubing from all water connections located at the rear of the device (only recommended if shipping the device to another building). Refer to **Section 14.1** for details on removing push-fit connections.

5 TECHNICAL INFORMATION

5.1 Theory of Operation

The Centurion Plus Heat disinfection device heats RO product water using a 1000 W heating element located in an atmospheric break tank to >176 °F to disinfect a single Hemodialysis machine feed water hose. The preheat time required shall be approximately 1 hr. Once the water reaches the disinfection temperature, the hot water is pumped from the tank at a rate of 1 L/min (approx. 0.25 GPM) for at least 10 minutes. This provides 10 minutes of contact time with water @ >176 °F to disinfect the Hemodialysis feed water hose. The device is intended to be paired with a hot water disinfect reverse osmosis system (AmeriWater Centurion) to provide a complete Centurion Plus Heat disinfection using no chemicals. See the following diagram:

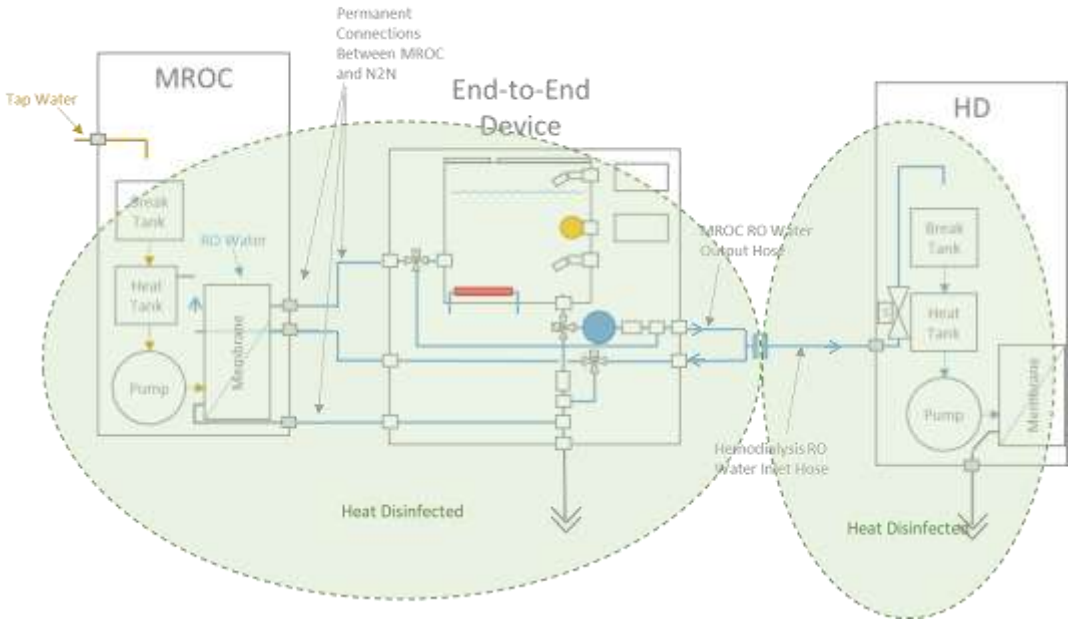

5.2 Specifications

5.2.1 Feed Water Specifications

Quality	RO Permeate	
Inlet Pressure	10-60	**PSI**
Temperature	34-95	**°F**
Continuous Free Chlorine	<0.1	**ppm**

NOTE: Centurion Plus Heat disinfection device shall only be fed by a reverse osmosis system. Do not connect the device to a tap water supply.

5.2.2 Drain Specifications

Maximum Drain Temperature	203	**°F**
Drain Flow Rate	1000	**mL/min**

NOTE: Drain must be unrestricted and capable of handling the maximum drain temperature for at least 12 minutes.

5.2.3 Electrical Specifications

Mains Supply (input)	115 VAC, 12 A, 60 Hz	
Output Voltage[1]	115 VAC, 12 A, 60 Hz	
Controller	24 VDC, 7 W	
Pump Motor	12VDC, 1.7 A	**VDC**
Power Supply (PS1)	24 VDC, 40 W	
Power Supply (PS2)	12 VDC, 40 W	
Solenoid coil supply	120 VAC @ 60 Hz	
Solenoid power-In rush	36	**W**
Solenoid power-Holding	16	**W**
Heating Element	120 VAC, 1000 W	

[1]Output voltage refers to accessory socket located behind block-off panel on rear of device. Accessory socket is intended to be used to power AmeriWater MROC portable RO system.

Electrical Supply	Operation	Max Power Consumption (W)*
Single Phase 115 VAC 60 HZ plus earth	Standby	5 W
	Heat Disinfection	1000 W
	Dispensing	40 W
	Manual Drain	33 W

***Add approximately 200 W to each power consumption specification if MROC system is running during Centurion Plus Heat disinfection Operation.**

5.2.4 Fuse Specification

External: (Located at rear of unit)
Type: 2 - 120 VAC, 12 A, fast blow, **0314012** - 0.25" OD x 1.25" L (**AmeriWater PN 063-0006**)

NOTE: Fuses should only be replaced by an AmeriWater supplied, or AmeriWater approved fuse.

NOTE: The fuses on the device may be replaced by the operator or authorized service personnel. Refer to **Section 10.6** for instructions for replacing the fuse.

5.2.5 Water services connections

Connection	Description	Size	Type
From RO	RO product water inlet	5/16" (8 mm)	Push-Fit
To RO	RO product water return to RO system	5/16" (8 mm)	Push-Fit
RO Drain	RO reject water from RO system drain outlet	5/16" (8 mm)	Push-Fit
Product Outlet	RO product water to HD machine	5/16" (8 mm)	Push-Fit

Product Return	Unused RO product water return from HD machine	5/16" (8 mm)	Push-Fit
System Drain	Common system drain for RO reject water and Centurion Plus tank drain	5/16" (8 mm)	Push-Fit

5.2.6 RO Product Water Storage Tank

Working Volume: 11.5 L
Material: 316L Stainless Steel
Heating Element Connection: 1" NPT
Float Switch Connection: ½" NPT
Thermocouple Connection: ¼" NPT

5.2.7 Weights and Dimensions

Weight (lbs)	Height (Inches)	Width (Inches)	Depth (Inches)
Dry: 57	32	7	18
Wet: 82			

5.2.8 SD Card Specification

Size: 16 GB
File Type: FAT32 formatted using Unitronics "SD Card Suite"

5.3 Environmental/Transport

This device is intended for use/transport in the following conditions:

Location	Indoor
Altitude [m]	Up to 2000
Ambient Temperature range [°C]	10-40
Relative Humidity	10-95%
Mains Supply Voltage Fluctuation	±10% of the nominal voltage

6 COMPONENTS IDENTIFICATION AND SCHEMATICS

6.1 Component Identification

Front

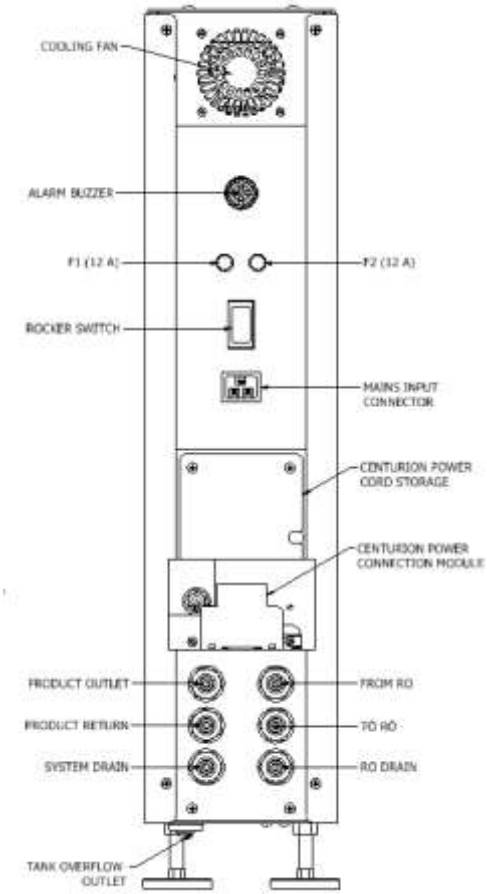

Rear

**** Refer to Section 5.2.3 for information regarding the Centurion Power Connection module***

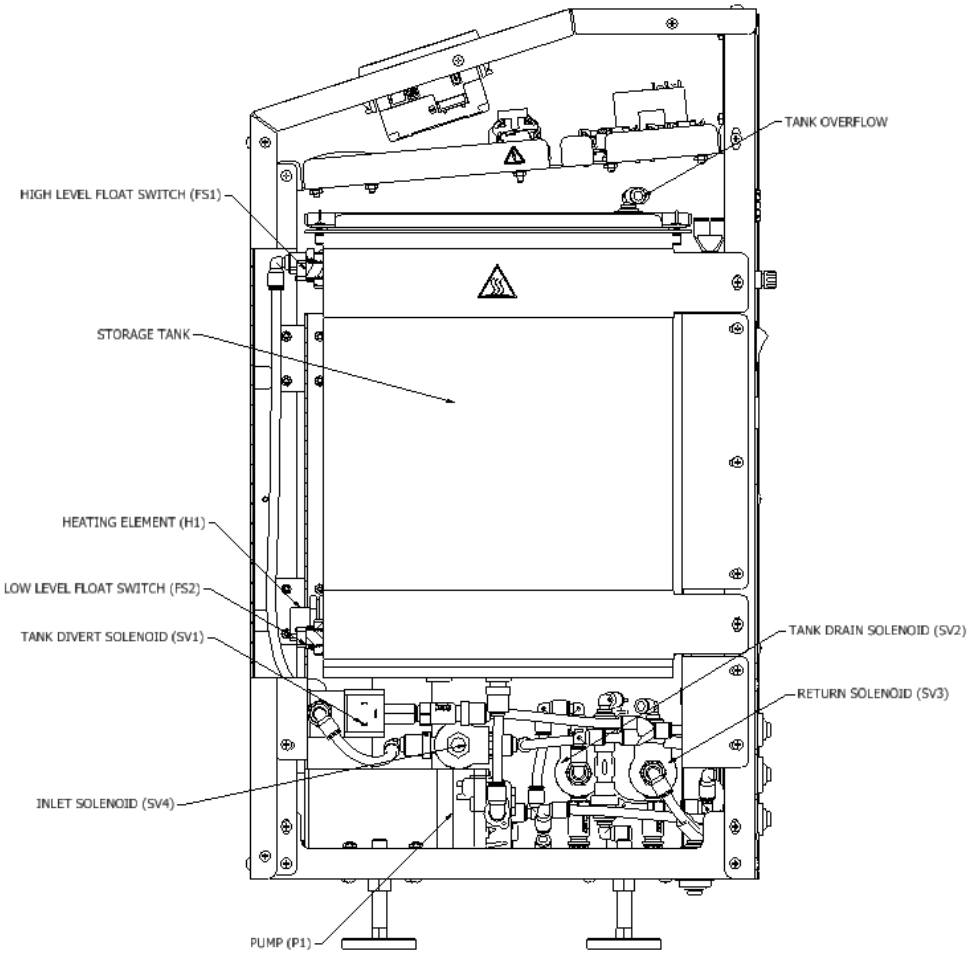
TANK OVERFLOW
HIGH LEVEL FLOAT SWITCH (FS1)
STORAGE TANK
HEATING ELEMENT (H1)
LOW LEVEL FLOAT SWITCH (PS2)
TANK DIVERT SOLENOID (SV1)
TANK DRAIN SOLENOID (SV2)
RETURN SOLENOID (SV3)
INLET SOLENOID (SV4)
PUMP (P1)

Right Side

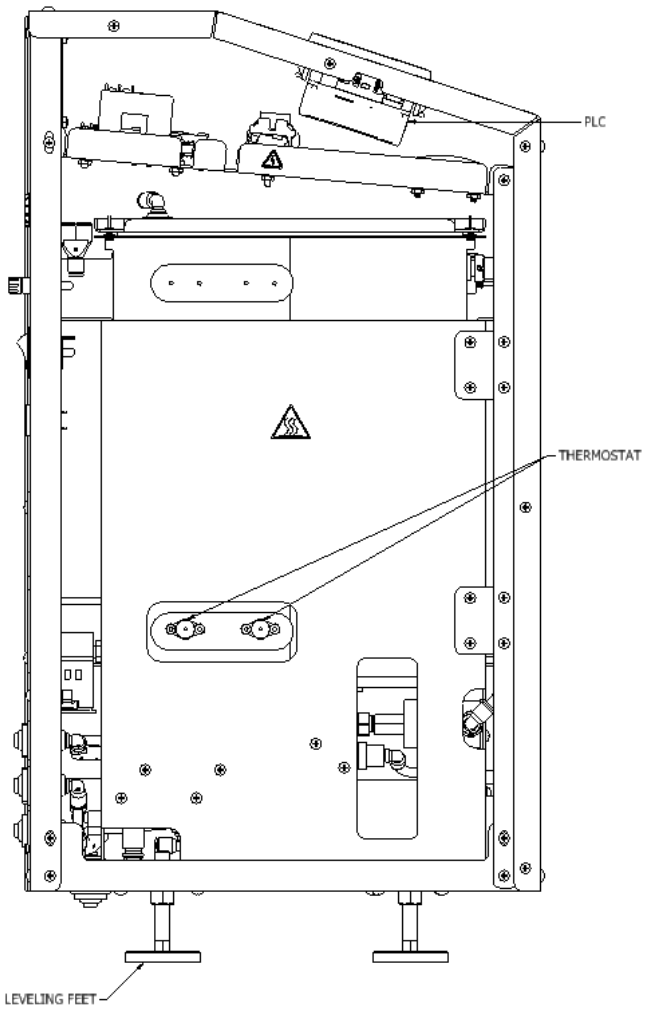

Left Side

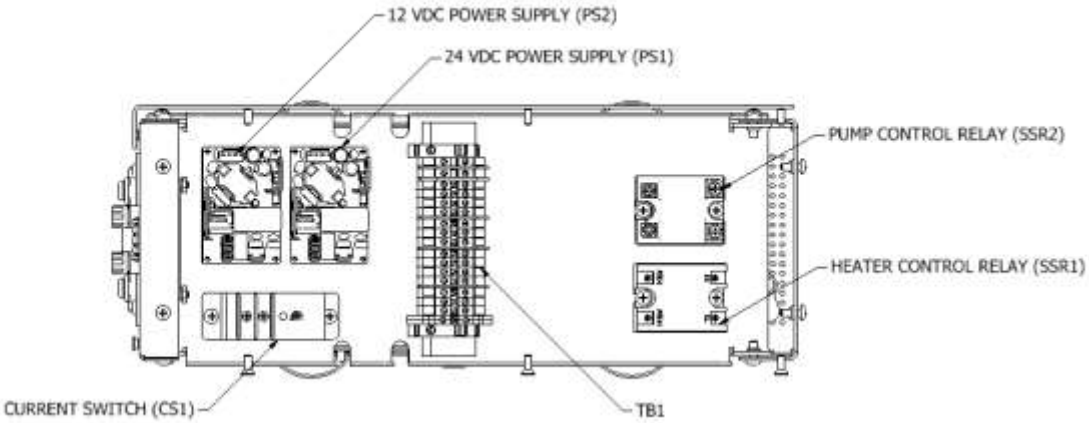

Top (with top panel and controller removed)

6.2 Electrical Schematic

Component Identification	
Label	**Description**
FS1	High Level Float Switch
FS2	Low Level Float Switch
SV1	Tank Fill Solenoid Valve
SV2	Tank Drain Solenoid Valve
SV3	Return from HD Solenoid Valve
SV4	Inlet Solenoid Valve
P1	Pump
H1	Heater
TC1	K-Type Thermocouple
FM1	Return Flow Meter
CS1	Current Switch
PS1	Power Supply (24 VDC)
PS2	Power Supply (12 VDC)
TB1	Terminal Block
Alarm	Buzzer located on rear panel
SSR1	Heater control solid state relay
SSR2	Pump control solid state relay

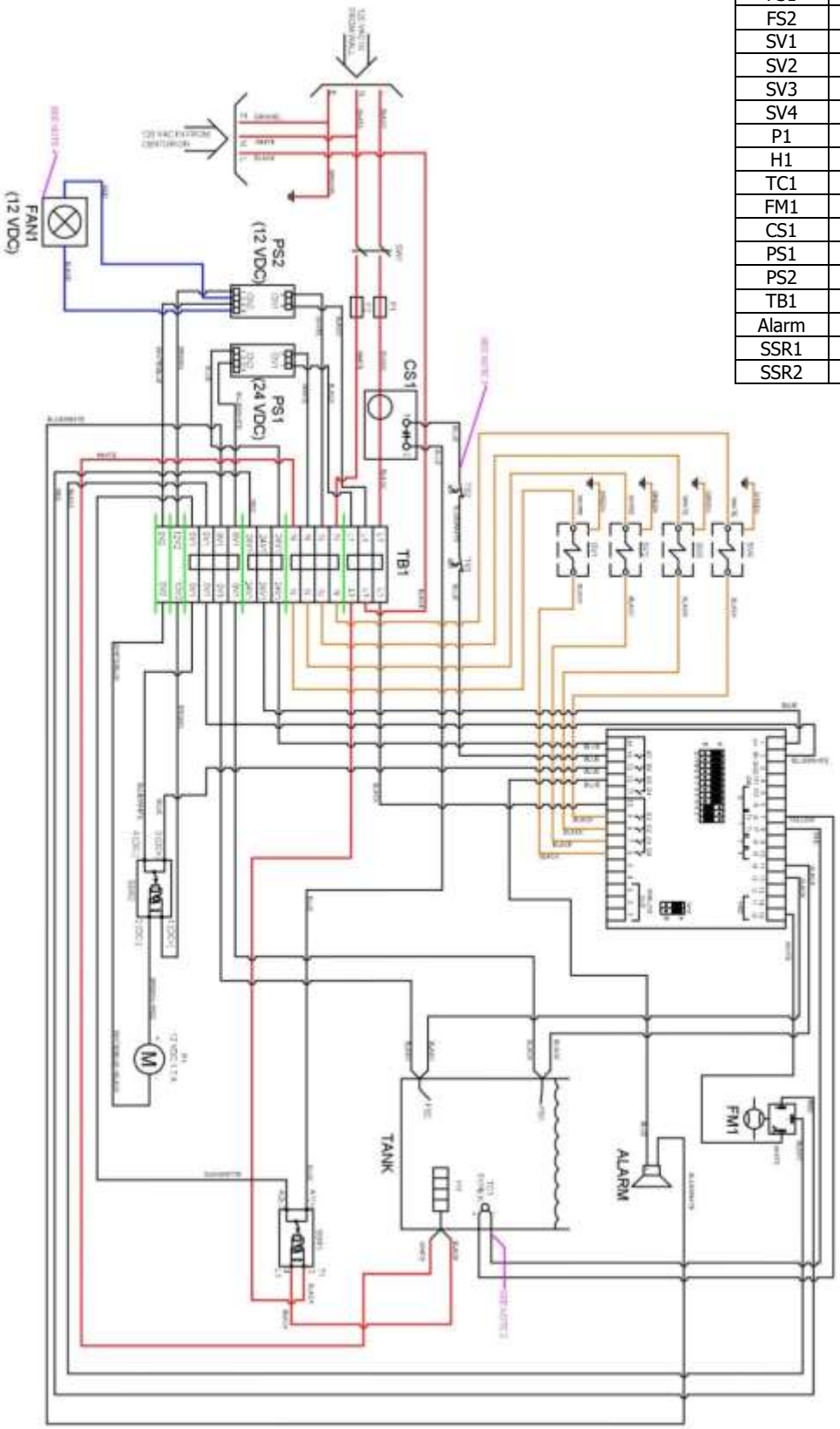

6.3 Flow Schematic

6.3.1 Standby Mode

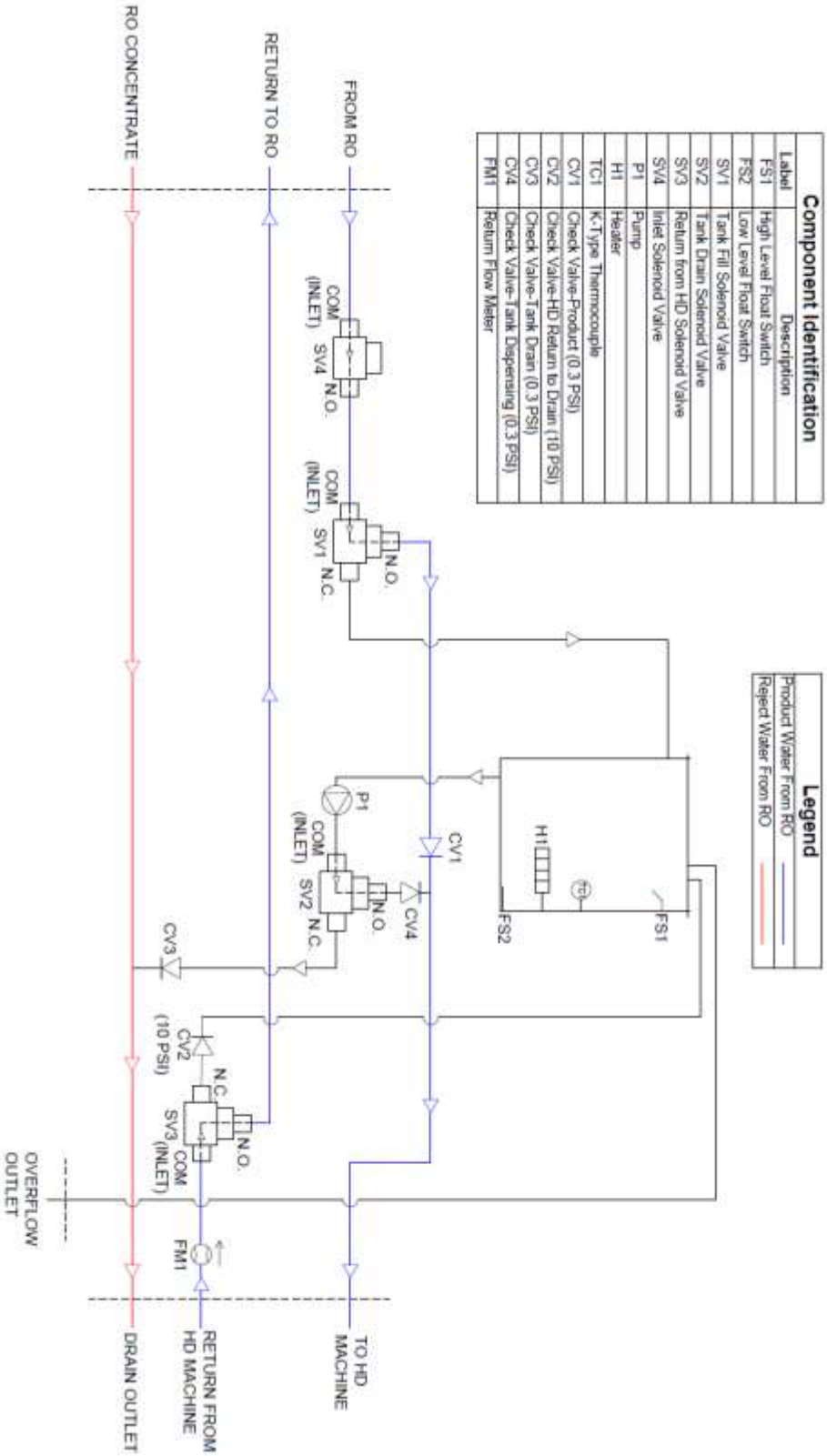

6.3.2 Preheat Mode

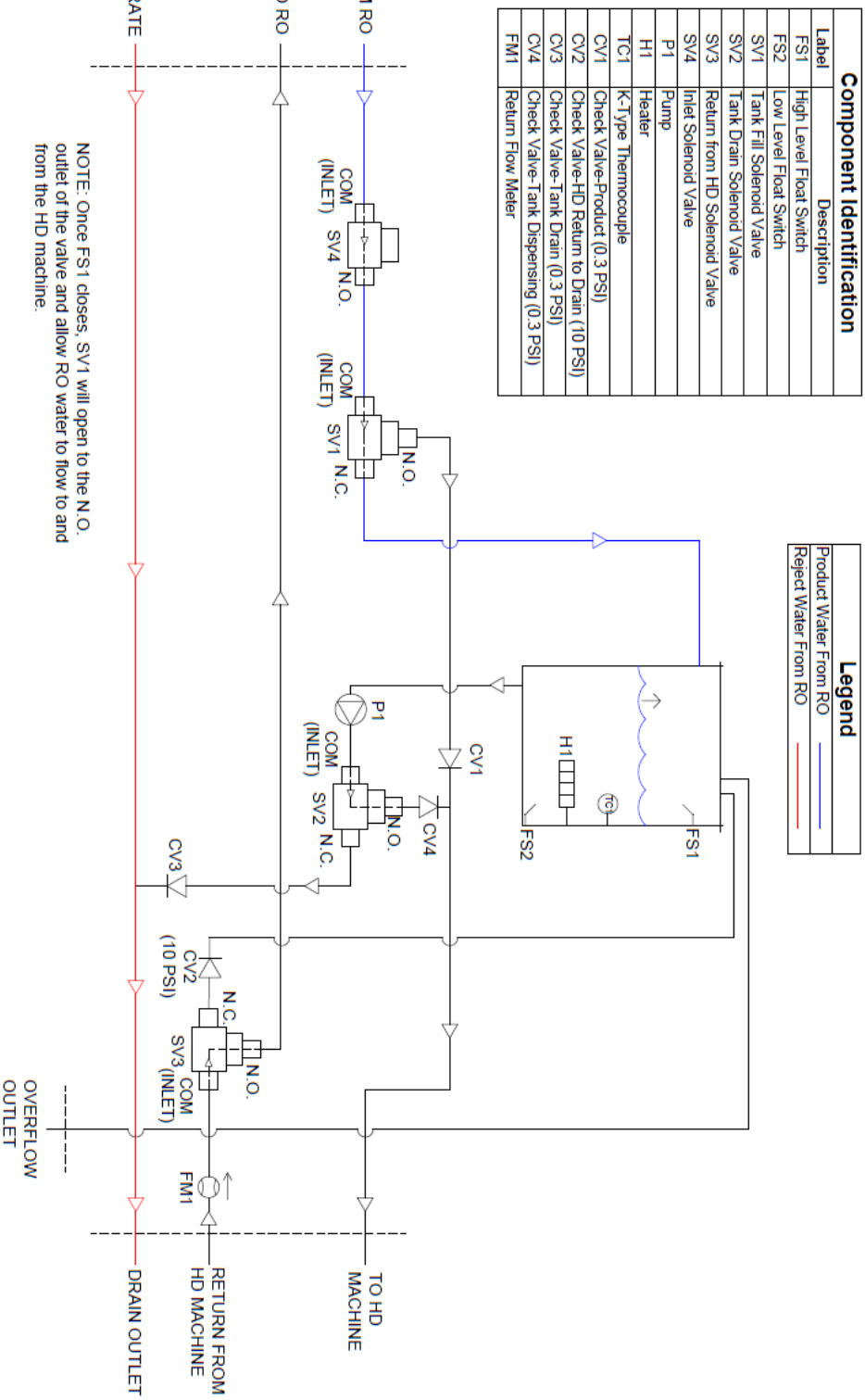

6.3.3 Dispensing Mode

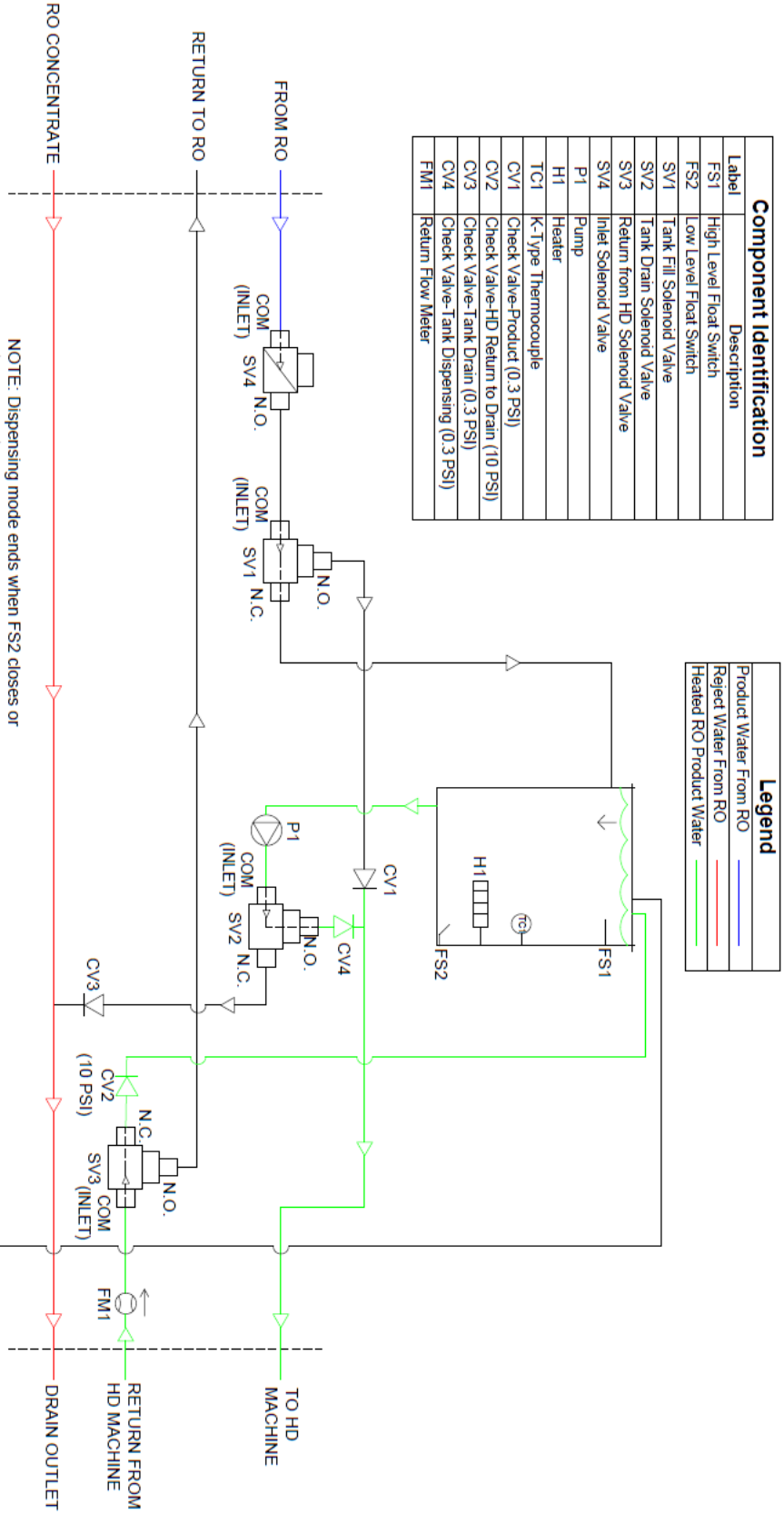

6.3.4 Drain Mode

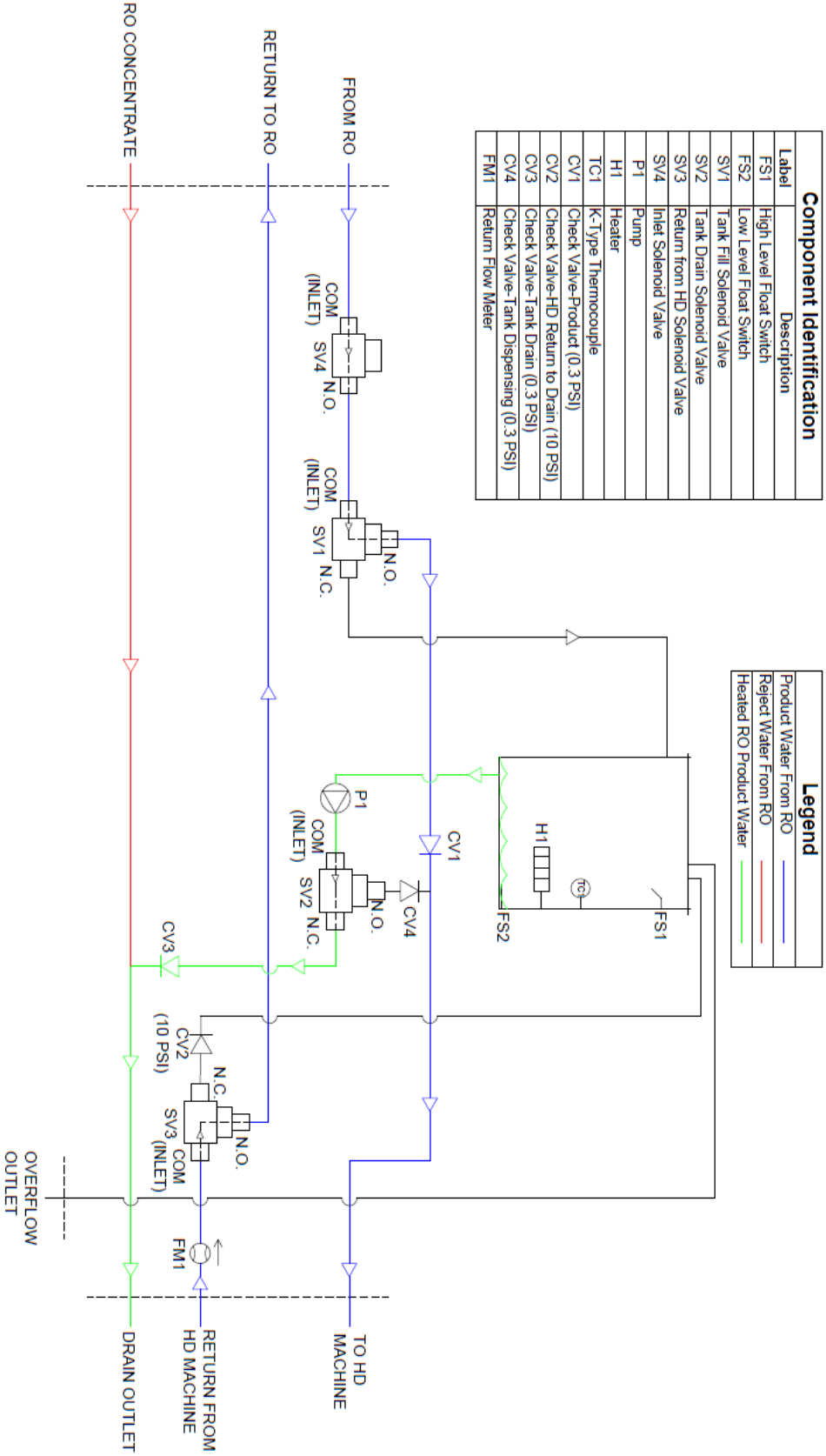

7 CONTROLLER
7.1 User Interface

The Centurion Plus Heat Disinfection Device is controlled via the touch screen located on the top of the unit. The image below shows a representation of the home screen display. To select an action, touch the screen on the appropriate button one time with your finger.

NOTE: **Do Not** use sharp or pointed instruments such as pens, pencils, etc. to operate the screen as this may damage the sensitive surface of the display. Always operate the screen using your fingertips. **Do not** press more than one button at a time.

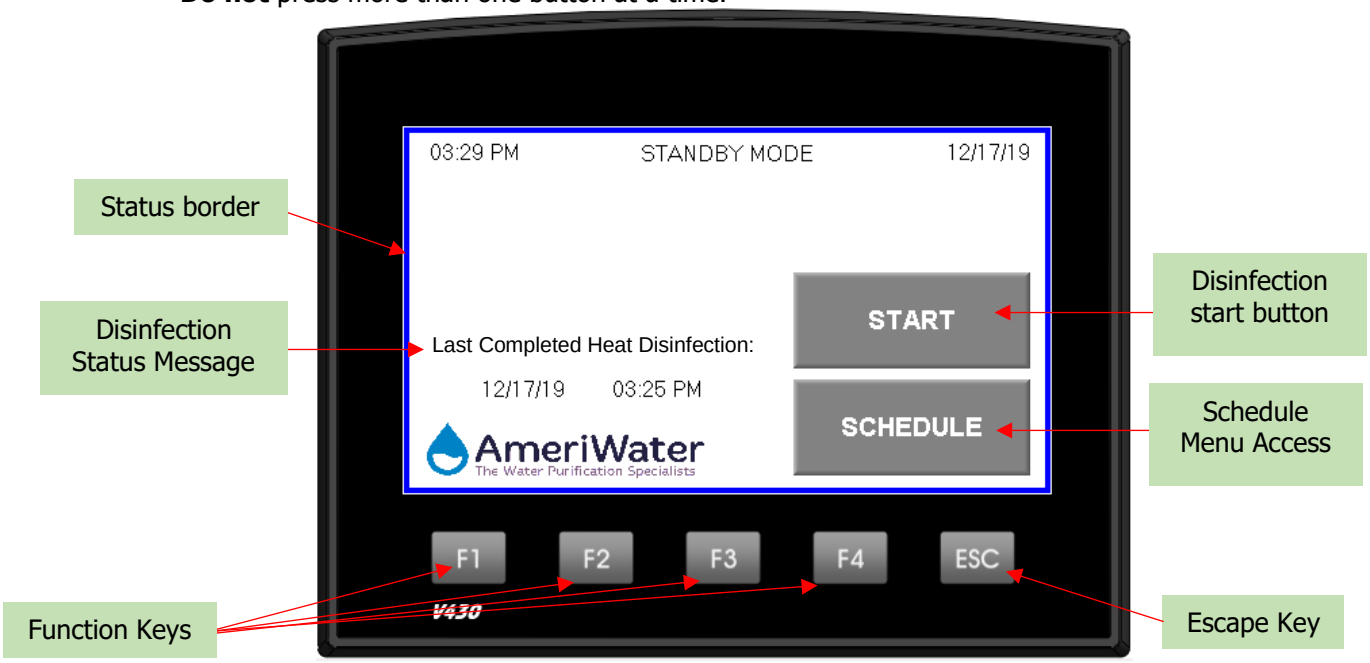

- **Start**
  - Press the button one time to begin a disinfection cycle. The User will be prompted to confirm that they want to perform a disinfection prior to the cycle starting.
- **Schedule**
  - Pressing the schedule button will prompt the user to enter a password to access the schedule menu. The passwords can be found in **Section 7.2**. Entering the appropriate password will allow the user to access the disinfection schedule for the device. The system settings will be accessible via a level 2 password from the schedule menu.
- **Function Keys**
  - Nonfunctional physical buttons located below touchscreen. Pushing these buttons will not provide any results for the user.
- **Escape Key**
  - Pressing the escape key while on a "System Screen" (i.e. time & date setting, keyboard, etc.) will return the user to the previous screen. An on screen escape button will also be present on these screens.
- **Status Border**
  - The border will change from blue to red when an alarm condition is present.
- **Disinfection Status Message**
  - The disinfection status message will inform the user of the status of the last disinfection. The message will say either "Last Disinfection Failed" or "Last Completed Heat Disinfection" and will provide a time and date stamp for the last disinfection. The

disinfection status will also be stored on the downloadable data log stored on the onboard SD card.

- Pressing the disinfection status message will allow the user to access the disinfection status log. This log will provide the user with the status of the previous 26 disinfection cycles.

7.2 Levels of Access

User Level	Password	Access	Intended User
Level 0	No Password	• Start Disinfection Cycle from Home screen • Change Date and Time • Disinfection Log • Alarm log (when alarm is active)	• Clinical Nurse
Level 1	5555	• Disinfection Schedule • Preheat Delay Timer • Storage mode toggle button	• Biomedical Technician
Level 2	3345	• Diagnostics Menu • Software Version • Restore Defaults • Manual Operation Menu • Alarm Log (when alarm is not active)	• Properly trained service technician • AmeriWater technical staff
Info Mode	1111	• Time and Date adjustment • Controller Update Via SD card	• Properly trained service technician • AmeriWater technical staff

7.3 Controller Inputs/Outputs

Inputs	
High Level Float Switch (I4)	1 Normally-Closed (Open on rise)
Low Level Float Switch (I3)	1 Normally Open (Close on rise)
Return Flowmeter (I0)	Pulse style flow meter (22,000 pulse/L, 83,200 Pulse/Gal)
Thermocouple (+I8, -I7)	K-type thermocouple (-454 to 2501 °F)
Controller Power	24 VDC, 7 Watts

Output Relays (8A max usage, or 3A per relay output)	
Tank Divert Solenoid (SV1,O0)	120 VAC, 16 W
Tank Drain Solenoid Valve (SV2, O1)	120 VAC, 16 W
Return to Drain Solenoid Valve (SV3, O2)	120 VAC, 16 W
Inlet Solenoid Valve (SV4, O3)	120 VAC, 16 W
Buzzer (O5)	24 VDC
Pump (O6)	24 VDC to SSR2
Heater (O7)	24 VDC to SSR1

7.4 Modes of Operation

7.4.1 Standby

The default mode of operation for the Centurion Plus Heat disinfection device is Standby. In standby mode, the device shall remain idle. No system outputs will be active during this mode. Standby mode shall be activated upon system start-up, following a successful disinfection cycle, or after an alarm condition has been activated during disinfection.

WARNING: All patients should be offline prior to beginning the preheat cycle. The RO water supply for the hemodialysis machine will be interrupted for approximately 10 minutes at the beginning of the cycle as the storage tank fills.

7.4.2 Storage Mode

Storage mode can be enabled via the device settings. Enabling storage mode will allow the device to begin heating water at a scheduled time. The display will provide the user with a message stating the time when hot water will be available for the HD machine to draw off for disinfection of the feed water hose. The schedule is based on 1 disinfection per week. Disinfection can be set on any day of the week. Setting the disinfection time to 00:00 on any day of the days of operation will disable disinfection on that day.

7.4.3 Preheat

Preheat mode occurs when the user presses the "Start" button on the home screen and confirms that a disinfection is desired. The system will display the current tank temperature and a status bar to provide the user with an estimate on how long the cycle has remaining. The preheat cycle will begin by filling the storage tank on the Centurion Plus Heat disinfection device with approximately 11 L of water. Once the high level float switch closes, the RO water will return to passing through the Centurion Plus Heat disinfection device. The system will begin heating the water in the storage tank until the disinfection temperature set-point is reached. A message will appear above the abort button that will inform the user when the heater is on and the tank is full.

NOTE: If the "**Temperature Maintain**" toggle is activated the system will require user input before hot water will be sent to the HD machine.

7.4.4 Dispensing

Once the disinfection temperature set-point is reached, the system will begin dispensing the water to the Hemodialysis machine. The Hemodialysis machine shall be in a suitable rinse mode prior to the beginning of the dispensing mode. The pump will operate until the tank is empty. The Heater will remain on to continue to heat the recirculating water. Dispensing mode ends after either 15 minutes or after the bottom float (FS2) closes. Upon completion of the dispensing mode, the system will enter drain mode to purge any remaining water. Then the system will return to standby at the Home screen. The Centurion Plus Heat disinfection device has been designed to provide at least 10 minutes of Hot water to the Hemodialysis machine during this cycle.

NOTE: Only Hemodialysis machines with the "Hot Water Kit" shall be used with the Centurion Plus Heat disinfection device.

NOTE: The Hemodialysis machine should be placed into a rinse mode that will have a duration of approximately 75 minutes from the start of the preheat mode. During the preheat period, the RO will continue to supply the HD machine with cold water.

7.4.5 Manual Tank Drain

The manual tank drain mode is intended to allow the user to drain the storage tank following an alarm condition or if the tank contains water when not desired. The manual tank drain mode can be activated by users with Level 2 access to the device from the diagnostics menu.

7.5 Operation

7.5.1 Start-Up

Once the Pre-Dialysis checks have been carried out, switch on the device using the rocker switch located at the rear of the device. Place the switch in the "**I**" position to power on the device.
Once the device is powered on, a splash screen will appear. This display will be present while the initialization process is being conducted. The splash-screen shall contain the logo and product name. This display will be active for approximately 5 seconds.

7.5.2 System Operational Controls

The Centurion Plus Heat Disinfection device is controlled by a Programmable Logic Controller (PLC) with an integrated operation panel that sends and receives signals to and from various components in the device. The user can set and view various parameters on the Human Machine Interface (HMI) display on the front of the device. This section provides an overview of each screen display to allow the user to gain familiarity with the device and basic system parameters.

Screen Example	Screen Description
Normal Operation: 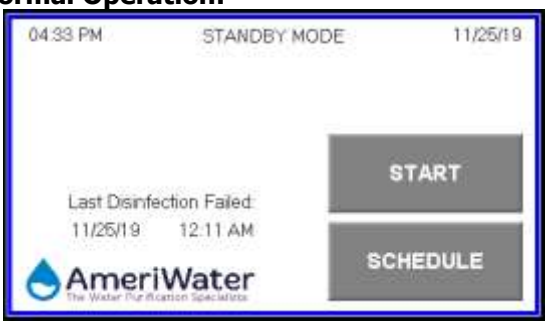 **Storage Mode Active – no schedule:** 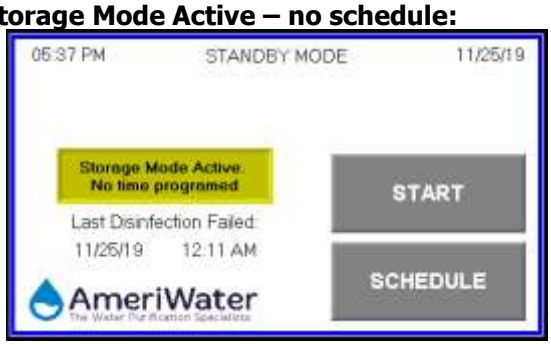 **Storage Mode Active – with set schedule:** 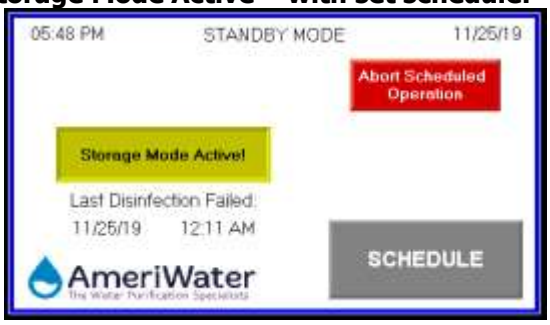 	**Home Screen** From this screen the user can start a disinfection cycle, enter the settings menu, see the last disinfection status, or navigate to the alarm menu if an alarm condition is active. The last disinfection status will show the user the time and date when the last disinfection was completed or failed due to an Abort or Alarm condition. If storage mode is activated, a message will be displayed informing the user that the system will operate based on a schedule. This screen also displays the current time, date and operating mode for the device. The current time and date may be adjusted following the steps shown in **Section 4.7**. **Start** Pressing this button will prompt the user to confirm that they would like to proceed with the disinfection. NOTE: the start button will be hidden if storage mode has been activated and at least one day has been set for a scheduled disinfection. **Schedule** Pressing this button will prompt the user to enter a "Level 1" password to access the disinfection schedule or system settings for the device. **Disinfection Status Message** The disinfection status message will display the status of the last disinfection cycle. Pressing on this message will allow the user to view the disinfection log. **Storage Mode Active Message** The message will be displayed when the storage mode is activated on the device. This message is intended to inform the user if the device has a set schedule. **Abort Scheduled Operation**

Screen Example	Screen Description
	This button will be hidden unless the device is in storage mode AND the current day is equal to the scheduled day of disinfection. Pressing and holding the button (2 seconds) will cancel a scheduled disinfection until the following day.
	**Disinfection Confirmation** This screen will appear after the "**START**" button is pressed on the home screen. Pressing the "**NO**" button will return to the Home Screen. Pressing the "**Yes**" button will begin a disinfection cycle. A warning message appears at the bottom of the screen which informs the user that the disinfection should not be started while dialysis treatment is occurring. The dialysis machine should be connected and in a "Rinse" mode to accept the hot water once the preheat cycle ends.
Temperature Maintain Mode Disabled: 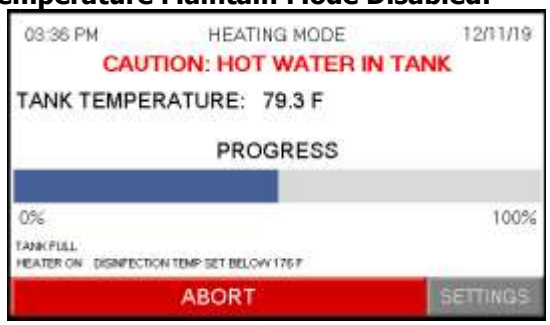 **Temperature Maintain Mode Active:**	**Preheat Mode Operation Screen** This screen appears once the user presses "Yes" on the confirmation screen. On this screen, the current tank temperature is displayed. A progress bar will scroll from left to right as the temperature increases. When the disinfection temperature is reached, the progress bar will be at 100%. A warning message will appear on the screen above the abort button when the disinfection temperature is set below 176 °F. If the "**Preheat Delay Timer**" is active, a message will appear on the screen with a calculated draw off time. This informs the user of the time when the HD machine should be ready to draw in hot water. **Abort** The abort button will send the user to an abort confirmation screen. When the abort is confirmed, the user will be sent back to the Home Screen. The abort will be logged in the Alarm History Log. **Settings** The settings menu at the bottom left corner of the screen will allow the user to access the settings menu via a "Level 1" password. This is intended for use by technicians when diagnosing issues with the device. **Hot Water to HD**

Screen Example	Screen Description
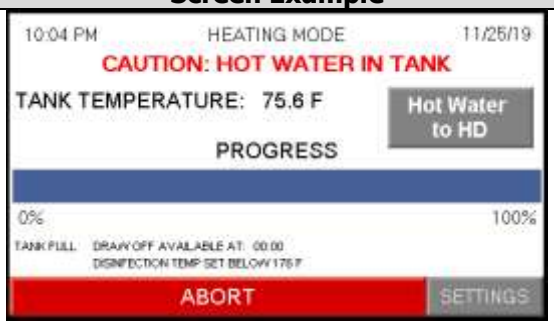	This button will appear when the tank maintain mode has been toggled on AND the measured tank temperature ≥ the disinfection set-point. During Temperature maintain mode, the button must be pressed to send hot water to the HD machine. If the button is not pressed, the system will continuously attempt to maintain the water at the disinfection set-point temperature while powered on.
	**Dispensing Mode Operation Screen** This screen will appear once the preheat mode is completed. The current tank temperature, time remaining for the water to be dispensed from the tank, and the return flow rate will be displayed. If the return flow monitor is disabled, the flow rate will not be displayed and a message stating "Return flow rate is not monitored" will be displayed. **Abort** The abort button will send the user to an abort confirmation screen. When the abort is confirmed, the user will be sent back to the Home Screen. The abort will be logged in the Alarm History Log.
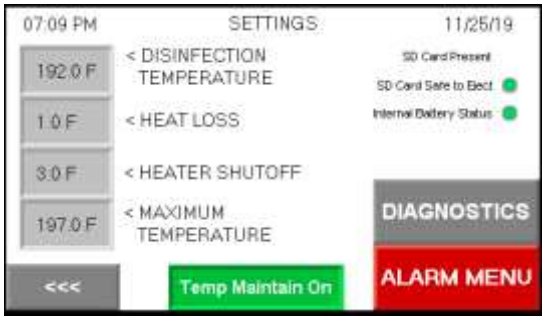	**Settings Menu** This screen is displayed if the user successfully enters the "Level 1" password upon pressing the settings button. NOTE: Settings should only be adjusted by properly trained personnel. From this screen, the user can adjust the disinfection temperature set point, expected heat loss, temperature at which the heater shuts off above the set point, and the maximum water temperature. The defaults values for these settings can be found in **Section 7.6**. **Diagnostics** Pressing the diagnostics button will prompt the user to enter a "Level 2" password. Upon entering the password, the user will gain access to the diagnostics menu. **Alarm Menu** Pressing the alarm menu button will send the user to the alarm menu where current alarms and alarm history can be viewed. **SD Card Present**

Screen Example	Screen Description
	The Centurion Plus Heat disinfection device uses an SD card to store the data recorded during disinfection cycles. The green indicator light will appear when this SD card is inserted and ready to accept data. **SD Card Safe to Eject** When the green indicator light is displayed, the SD card may be safely ejected from the controller. **Internal Battery Status** When the internal battery for the PLC falls below an acceptable voltage, the indicator light will go out. When the light goes out, the low battery alarm will be activated. When this alarm is active, the battery must be replaced in order for the PLC real time clock to be maintained. See **Section 10.5** for information on the battery. **Temp Maintain On/Off** This toggle will allow the user to enable temperature maintain mode. When enabled, this mode will prevent the device from automatically sending hot water to the HD machine upon achieving the disinfection set-point temperature. The user will be prompted with a button on the display that will send the hot water to the HD machine. NOTE: This mode **SHOULD NOT** be enabled with storage mode. If it is enabled, the device will never send water to the HD machine. Warning: Ejecting the SD card when the green light is not active may cause damage to the SD card.
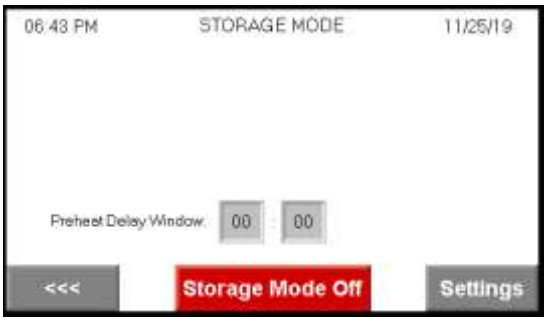	**Schedule Menu/Storage Mode** This settings page will be displayed upon pressing the "schedule" button in the Settings menu. This menu will allow the user to set a scheduled time for a disinfection. **Day of the Week (Sunday – Saturday)** Pressing on each day of the week will prompt the user with a set time for disinfection as well as the time when hot water will be available based on the "Preheat Period" setting. Activating each day of the week will change the color to a darker grey indicating that a disinfection will occur on this day.

Screen Example	Screen Description
	**Storage Mode On/Off** Pressing the storage mode On/Off toggle at the bottom of the display will toggle the schedule based operation on or off for the device. Turning storage mode "off" will hide the day of the week settings. **Preheat Delay Window** The preheat delay window setting will set a fixed time period that the device must exceed before hot water will be available to the HD machine. Setting this value less than 1 hr 10 min will prompt the user with a message stating that the time must exceed 1 hr 10 min. Setting this value will provide the user with a fixed draw off time when hot water will be available for the HD machine.
Daily Schedule – Draw off time not available 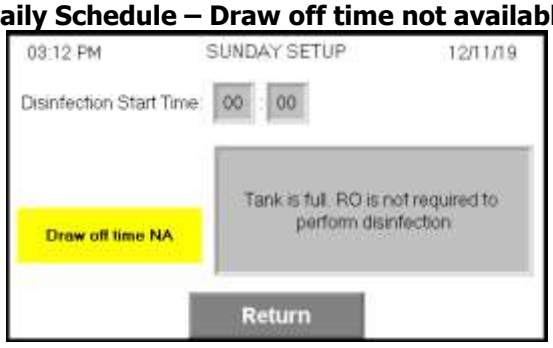 **Daily Schedule – Draw off time available** 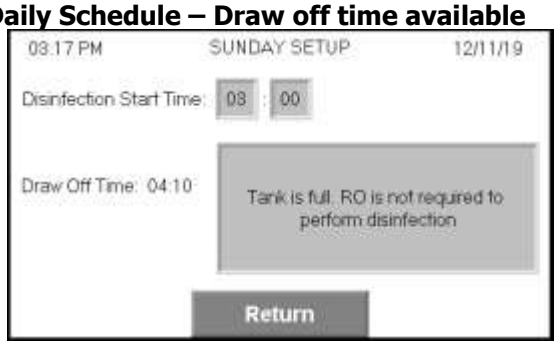	**Daily Schedule Setup** Selecting each day of the of the week will prompt the user with the following menu. This menu will allow the user to set the desired disinfection start time. A message on the right hand side will inform the user if the tank is full or if the RO must be running at the time the disinfection cycle starts. The RO must be running when the cycle starts to supply water, or the disinfection cycle will fail. **Disinfection Start Time** Setting this value to 00:00 will disable disinfection on this day. The value must be set in 24 hr clock format. **Return** Pressing the return button will return the user to the main scheduling menu. **Draw off Time** This time will be calculated based on the "Preheat Delay Window" set on the main scheduling menu. If the draw off time cannot be calculated, a message will appear stating that the draw off time is not available. **Example:** Monday disinfection @ 7:30 pm desired: Set Monday @ 19:30 with 1 hr 30 min preheat period. Draw off time = 21:00 (9:00 pm)

Screen Example	Screen Description
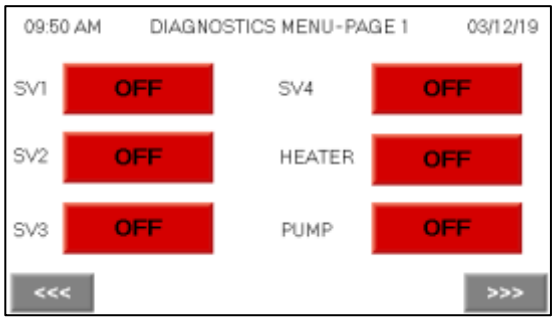	**Diagnostics Menu-Page 1** When the user successfully enters a "Level 2" password after pressing the Diagnostics button, page 1 of the diagnostics menu will be displayed. The user may manually cycle the outputs on and off using this menu. This screen is intended for users to diagnose issues with specific outputs. NOTE: Failure to shut off the output once diagnostics for the device has been completed may lead to interruption of normal system operation. This menu is only available to the user when accessing the settings via the Home Screen.
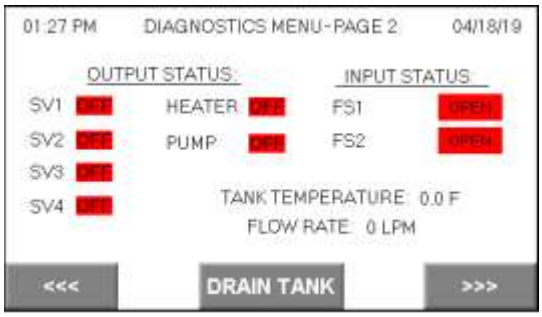	**Diagnostics Menu-Page 2** Pressing the right arrow located at the bottom of diagnostics menu page 1 will allow the user to see the current status of the system inputs and outputs as well as the current return flow rate and tank temperature. **Drain Tank** Pressing the drain tank button will turn the system pump on to drain water from the storage tank inside the device. The pump will run for 30 seconds after the lower float switch closes to allow the tank to empty completely.
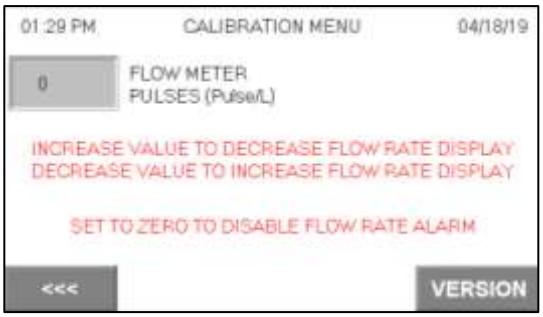	**Calibration Menu** The calibration menu allows the user to change the pulses per L for the flow meter to adjust the flow rate display for the device. If the value is set to 0, the return flow monitoring feature will be disabled. Increasing the value will decrease the flow rate displayed. Decreasing the value will increase the flow rate displayed. See **Section 7.6** for the default setting. **Version** Pressing the "Version" button will allow the user to see the current revision for the HMI and PLC program in the device.
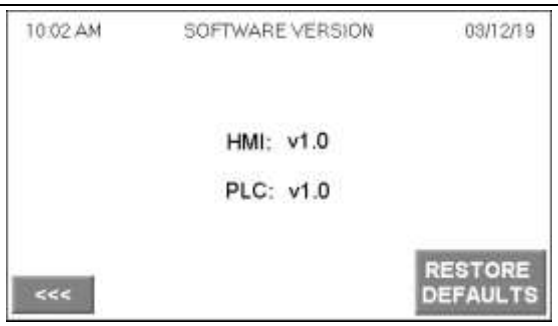	**Software Version** This screen is accessed by pressing the "Version" Button. This screen will allow the user to view the current HMI and PLC program versions. **Restore Defaults** Pressing the restore defaults button will install the factory default settings into the device. A confirmation screen will appear to before the default settings are installed.

Screen Example	Screen Description
	**Manual Tank Drain Mode** Pressing the "Tank Drain" Button will activate the manual tank drain mode. The pump will activate to drain the water from the storage tank.
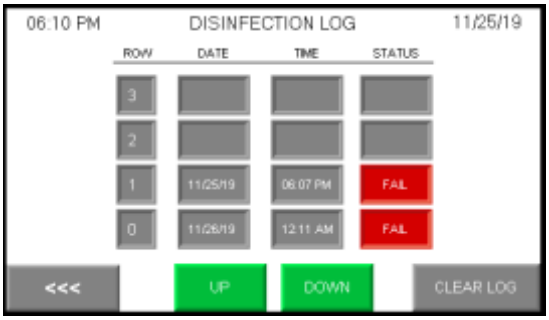	**Disinfection Log** The disinfection log is accessed by pressing the last disinfection status message on the home screen. **Up/Down** Pressing the up and down buttons will scroll through the log. The most recent disinfection should be displayed at the top of the log file when entering the log. **Clear Log** Pressing this button will clear the log. The button will require a press and hold for 2 seconds to clear the log.
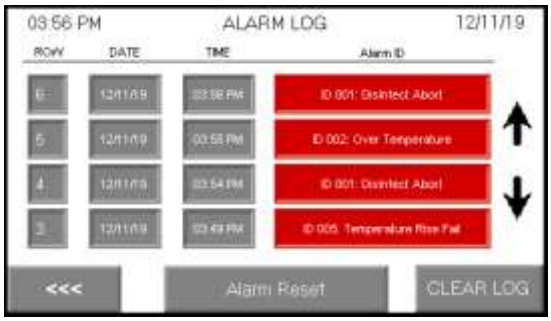	**Alarm Log** The alarm menu may be accessed by the "Alarm Menu" button on the settings menu or by pressing the "View Active Alarms" prompt that appears on the home screen during an alarm condition. **Alarm History** The last 100 alarm conditions will be recorded in this log. The oldest alarm will be overwritten if more than 100 alarms have occurred in the device. Pressing the up and down arrows will allow the user to scroll through the log. Each time the log is entered, the most recent alarm condition will appear at the top of the log. **Current Alarm** If the alarm reset button is active, then there is a current active alarm condition. The current active alarm is listed at the top of the log each time the log is entered. **Clear Alarm Log**

Screen Example	Screen Description
	Pressing and holding this button for 2 seconds will clear the alarm log.
	**System Keyboard** When the user is prompted to enter a password or settings value, a simple keyboard will appear. Using the ESC button will allow the user to return to the previous screen. The enter key is located in the lower right hand corner of the display.

7.6 Settings Descriptions and Defaults

Setting	Description	Default	Setting Range
Disinfection Temperature	This temperature will determine the temperature at which the Preheat cycle will end prior to dispensing mode. Temperatures below 176°F should only be used for troubleshooting the device.	188°F	50.0-195.0°F
Heat Loss	The heat loss setting sets the temperature below the disinfection set-point at which the heating element turns back on.	1°F	0.5-10.0°F
Heater Shutoff	The Heater Shutoff temperature sets the point at which the heating element is turned off during the preheat cycle. This value is added to the disinfection temperature to prevent the tank temperature from rising to an unsafe level.	1.5°F	0.5-10.0°F
Maximum Temperature	This temperature sets the maximum allowable temperature for the device. If this temperature is exceeded for 30 seconds, the device will activate an "Over Temperature Alarm".	197 °F	50.0-203.0°F
Flow Meter Pulses	This setting sets the expected pulses/L of water passing through the return flow meter. Setting the value to 0 will disable the Water loss alarm for the device.	22000	0-99999

7.7 Controller Detail View

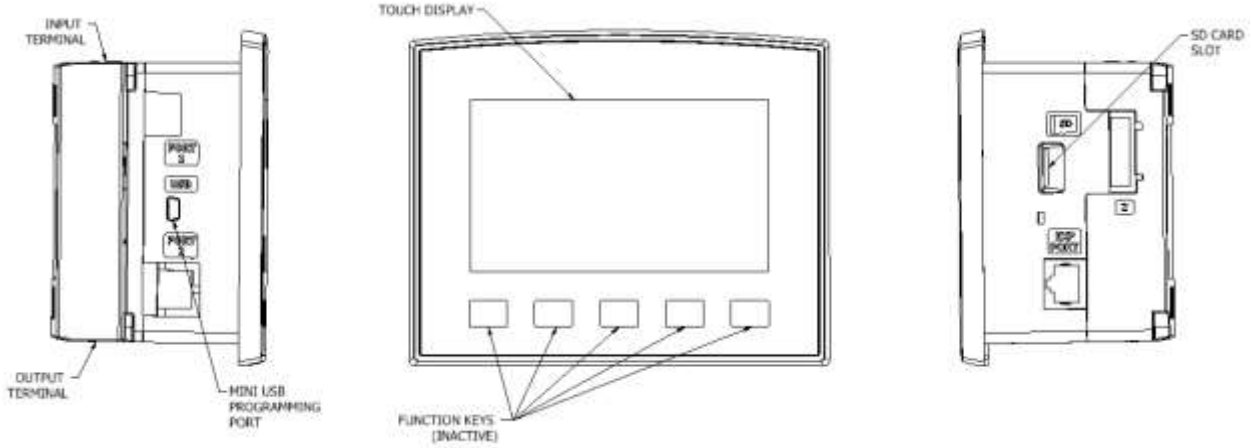

8 HEAT DISINFECTION

8.1 What is being disinfected?

The Centurion Plus Heat disinfection device is intended to disinfect the hose used to feed a Hemodialysis machine with purified RO water. Typically, the RO and Hemodialysis machine are disinfected using their own automated disinfection processes. Neither the RO or Hemodialysis machines disinfection procedures disinfect the feed water hose which leaves it up to the end user to chemically disinfect. The Purpose of the Centurion Plus Heat disinfection device is to disinfect this hose between the RO and Hemodialysis machine using an automated heat disinfection cycle.

8.2 Frequency

Disinfection of the feed water hose to the Hemodialysis machine is required monthly. AmeriWater recommends at least one weekly heat disinfection of the feed water hose for the hemodialysis machine. Environmental conditions may warrant more frequent disinfections.

8.3 Heat Disinfection Sequence

Screen Display	Operators Action
Step 1: 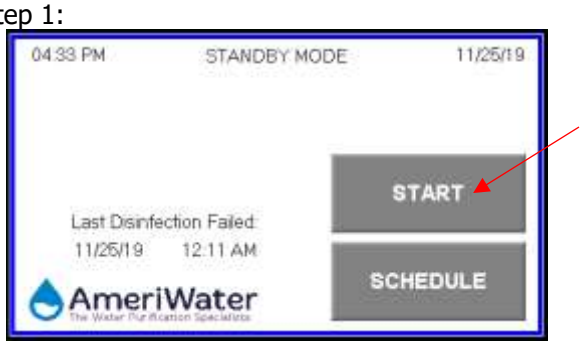	From the **Home Screen** select "**Start**"
Step 2: 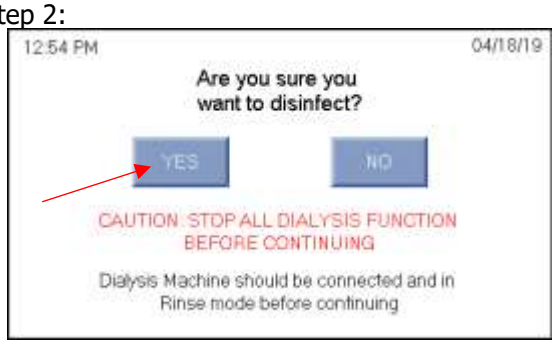	Pressing "**Start**" will cause the confirmation screen to appear. Select "**Yes**" to begin the disinfection cycle. At this point, the RO system feeding the Centurion Plus Heat disinfection device should be operating.
Step 3:	The Preheat cycle will begin upon confirming the disinfection. At the beginning of this cycle, the storage tank will begin to fill with RO water. Once the tank is full, the RO water will continue to pass through the device as if it were in Standby. The preheat cycle will remain active until the water in the tank reaches the desired disinfection temperature. At any time during the preheat cycle, the Hemodialysis machine can be placed into a rinse cycle (rinse cycle must allow for at

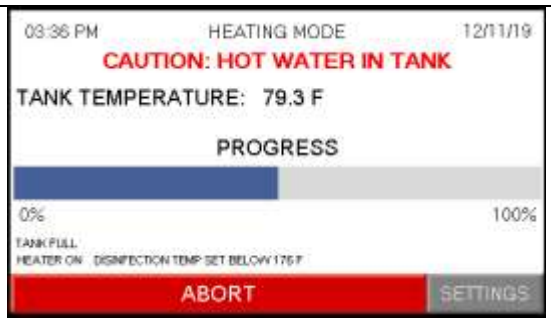	least 10 minutes of hot water at the completion of preheat). NOTE: If the temperature maintain mode toggle is activated, the system will maintain temperature at the disinfection set-point until the user presses the "Hot Water to HD" button
Step 4: 	Upon the completion of the Preheat cycle, the pump will turn on and begin pumping the hot water to the Hemodialysis machine. The Centurion Plus Heat disinfection device will return to the Home screen upon completion of the dispensing mode. NOTE: The Hemodialysis machine should be in rinse mode prior to the start of the dispensing mode

NOTE: If Storage Mode is active on the device, the "START" button will be hidden on the main display. At the scheduled time, the device will begin disinfection and follow the same sequence of operations.

9 MONITORING

9.1 On board data logging

The Centurion Plus Heat Disinfection Device is equipped with a 16 GB microSD card that records data every 30 seconds during the disinfection cycle. The system will record the date, time, tank temperature, SV1-SV4 status, pump status, heater status, FS1 and FS2 status and the result of the disinfection cycle. The SD card is located on the right hand (when viewed from the front) side of the touch screen controller. The right side cover must be removed in order to access the SD card. The data is saved as a .CSV file that can be viewed in Excel.

In order to view the data log file, a microSD → SD card adapter and an SD → USB adapter will be required. Remove the SD card from the device and plug the SD card into a computer using the required adapter. Navigate to the SD card in the file explorer of the computer. Locate the data log file in the "Excel" folder on the SD card. The data log will be named DATALOG.CSV.

NOTE: The SD card has the capability to save approximately 11000 days worth of data. It is recommended to remove the SD card and delete the data log file yearly to prevent issues with data recording.

CAUTION: Do **NOT** save the data log on the SD card. If the data log needs to be saved, be sure to save the file onto the local computer. Saving the datalog on the SD card will convert the file to a .xls (Excel) file and will prevent the Centurion Plus Heat disinfection device from recording data onto the SD card. If the file is saved on the SD card, delete the file before reinstalling the SD card into the Centurion Plus controller.

CAUTION: When removing the SD card, the device should be powered off. Failure to do so may cause the data file to become corrupt.

10 MAINTENANCE

10.1 Planned Routine Checks

It is recommended that regular checks are carried out on the device and its performance to ensure safe and uninterrupted operation. Refer to the table below for details.

NOTE: The frequency of performing the checks indicated should be considered as a guide only and will depend on how often the device is used.

Frequency	Task
Daily	• Pre dialysis checks (**section 4.10**)
Weekly	• Heat disinfection cycle status. ○ Record of last disinfection can be viewed on Home screen. Refer to **section 7.1**.

Monthly	• Bacterial growth and Endotoxin concentration in dialysis water (sample at RO product hose sample port) as per ANSI/AAMI/ISO 13959:2009.
	  ○ <100 cfu/mL Bacteria
	  ▪ Action Level: 50 cfu/ mL
	  ○ <0.25 EU/mL Endotoxin
	  ▪ Action Level: 0.125 EU/mL

Yearly	• Verify current switch prevents MROC heat disinfect and Centurion Plus disinfection from occurring at the same time (**section 12.5**) • Electrical safety test (**section 10.2**).

10.2 Electrical Safety Inspection

It is recommended that an electrical safety inspection is carried out:

- On newly acquired equipment prior to being accepted for use
- During routine planned preventative maintenance
- After repairs have been carried out on equipment

WARNING: A patient should never be connected to a piece of equipment that has not been checked.

Test	Notes	Limit
Earth continuity NC	Use test current of 1 A or less. Test probe should be connected to the control panel metal plate	<0.2Ω
Dielectric Withstand (HIPOT) Test	Test at 1250 VAC for 2 seconds	<5.0 mA
Normal Condition	L1 and L2 right way round	<0.5mA
Normal Polarity/Ground Open	L1 and L2 right way round with Protective earth open	<10mA
Polarity Reversed	L1 and L2 wrong way round	<0.5mA
Polarity Reversed/Ground Open	L1 and L2 wrong way round with Protective earth open	<10mA

10.3 Planned Preventative Maintenance Schedule

The Centurion Plus Heat disinfection device has a designed operation life of a minimum of 5 years. The components listed in the preventative maintenance schedule have the potential for failure during that lifespan depending on environmental conditions and routine maintenance of the device. This table is intended to provide guidance for the replacement schedule of components, but is **NOT** mandatory for safe and effective operation of the device. The planned preventative maintenance schedule is only meant to be an indication of the components that may fail prematurely.

Part Description	Part Number	12	18	24	36
Pump	080-0012				
Heater	999-3675				
SV1	001-059-0001				
SV2	001-059-0002				
SV3	001-059-0003				
SV4	001-059-0004				
Battery	999-3686				

10.4 Cleaning External Surfaces

Use a clean damp cloth to wipe down the surface of the device. Take care not to get excess liquid around the touch screen controller. A 1:10 Bleach concentration (on a towel or pre-wetted wipes) is an acceptable surface disinfectant for the external surfaces of the device

CAUTION: Take necessary precautions when wiping up bodily fluids.

10.5 PLC Battery Replacement

The PLC for the device monitors the internal battery voltage constantly. When the battery voltage is low, an alarm will appear informing the user that the battery needs to be replaced. If the battery is not replaced, the time and date will not be stored and the device may lose the PLC memory when the power is removed. Use the following steps to replace the battery. The replacement part number for the battery can be found in **Section 13.2**.

Steps	Actions
Step 1: 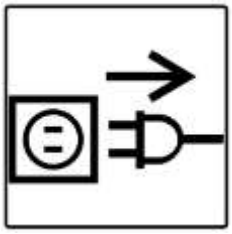	Turn off the rocker switch at the rear of the device and unplug the device from the 120 VAC outlet before continuing
Step 2: 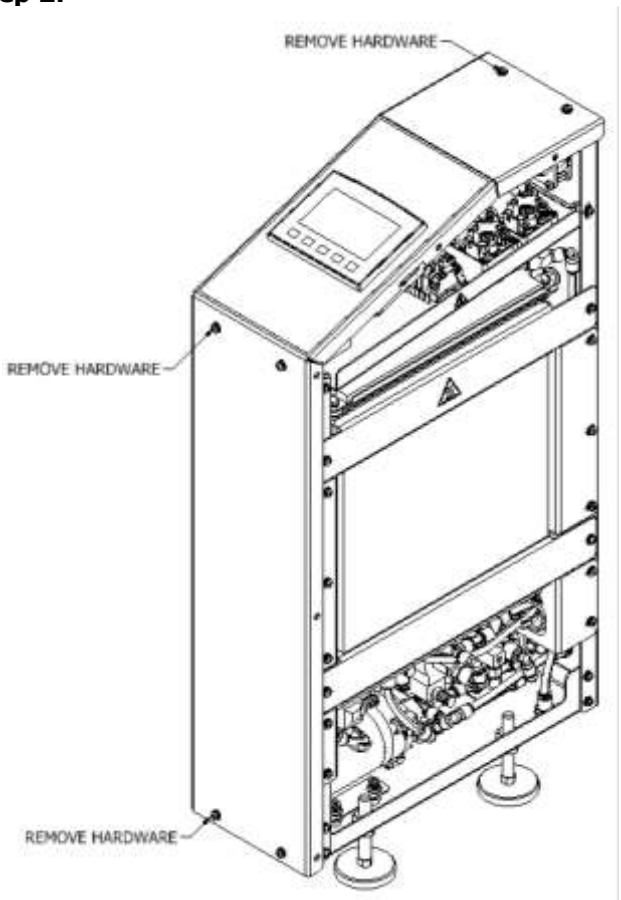	Remove the side covers from the device and unscrew the fasteners for the top panel shown
Step 3:	Carefully unplug the input and output terminals from the PLC. Ensure nothing is attached to the top panel for the device.

Steps	Actions
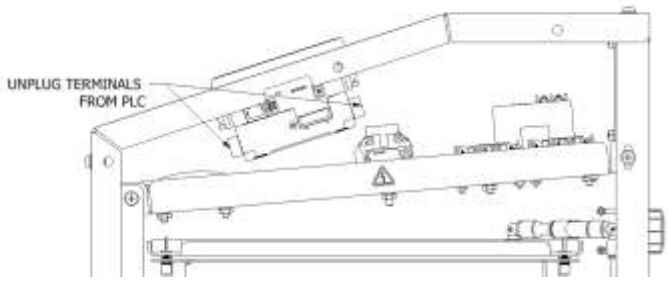	
Step 4: 	Lay the top panel with the PLC on a soft surface to avoid scratching the display or powder coating on the top panel. Use a #2 Phillips screw driver to unscrew the 4 screws holding the rear cover for the PLC. With the screws removed, pull the plastic cover straight up to remove and expose the circuit board below.
Step 5: 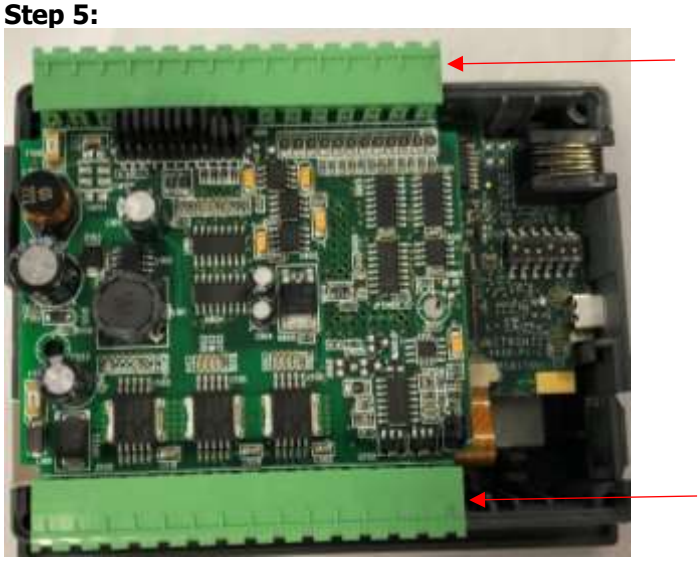	Grab the circuit board by the Green terminal blocks and pull straight up. The upper circuit board should pull away from the lower circuit board. Place the upper circuit board in a safe location
Step 6:	With the upper circuit board removed, locate the battery. Pull up on the clip for the battery and slide the battery out of

Steps	Actions
	the tray. Reinstall the new battery into the tray.
Step 7: 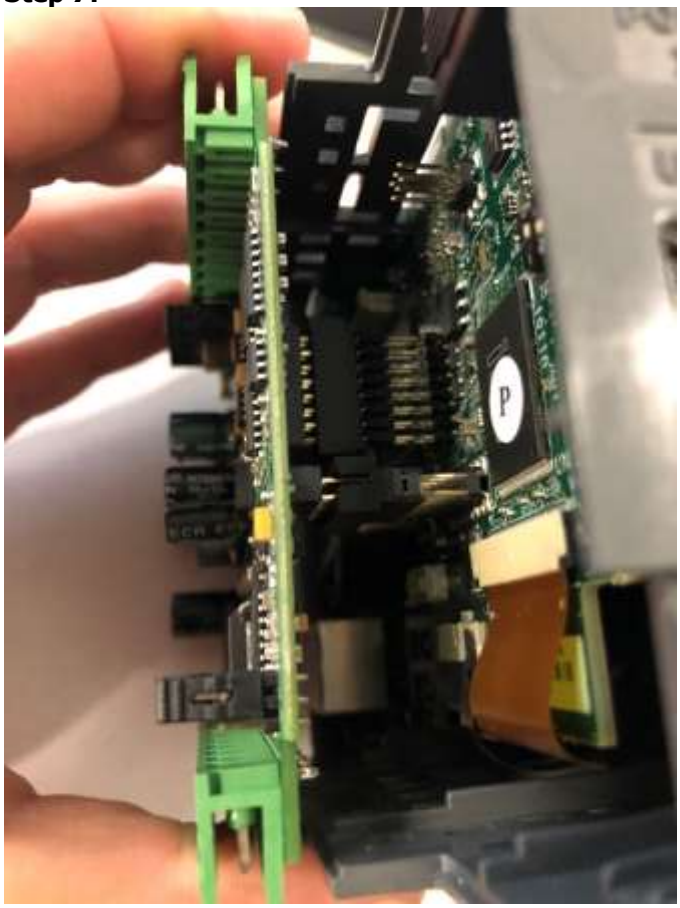	With the new battery installed, reinstall the upper circuit board onto the lower. Be sure to align the pins shown to avoid bending them. Do not force the connector together or damage may be caused to the PLC.
Step 8:	With the circuit boards reconnected, reinstall the rear cover onto the PLC and

Steps	Actions
	reinstall the top panel onto the device. Plug the input and output terminals onto the PLC and reinstall the side covers.
Step 9:	Power on the device and reset the time and date.
Step 10:	Return the device to service.

10.6 External Fuse Replacement

The Centurion Plus Heat disinfection device is equipped with 2 – 12 A fast acting cartridge fuses located on the rear of the device. These fuses may be replaced by the operator of the device or an authorized technician. Use the steps listed below to safely replace the fuses on the device. Refer to **Section 5.2.4** for the fuse specifications.

Steps	Actions
Step 1: 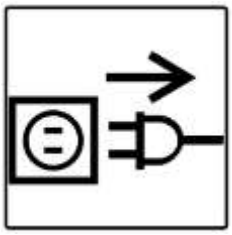	Turn off the rocker switch at the rear of the device and unplug the device from the 120 VAC outlet before continuing
Step 2: 	Locate the fuse holders at the rear of the device. Push the cap on the fuse holder in and turn counter clockwise.
Step 3:	With the cap loosed, pull the cap and fuse straight out of the fuse holder.
Step 4:	Remove the existing fuse and locate the replacement fuse. Insert the replacement

Steps	Actions
	fuse into the fuse holder and reinsert the fuse into the cap.
Step 5:	Reinsert the fuse and cap into the fuse holder. Align the locking tabs and push the fuse and cap toward the fuse holder. Turn the cap clockwise. The fuse holder should lock in place when successfully installed.
Step 6	Repeat steps 2-5 for the second fuse. Reconnect the device to the 120 VAC outlet when both fuses have been successfully replaced. Verify the device powers on and return the device to service.

10.7 How to format SD card

The SD card located in the PLC on the End to End device is pre-formatted to save data logs during disinfection cycles from the factory. If this SD card is lost, damaged or replaced with an SD card that was **NOT** supplied by AmeriWater, that SD card must be formatted before use to work properly. Use the following steps to format the SD card. Refer to Section 0 for SD card specifications.

Steps	Actions
Step 1: 	Connect the SD card to a windows PC using a micro SD to SD. A suitable adapter is included with the system when purchased.
Step 2:	On the windows PC, navigate to the following URL: https://unitronicsplc.com/. In the navigation menu at the top of the page, select SOFTWARE → VISILOGIC.
Step 3:	Scroll to the bottom of the page and select **Download Software Utilities**. The menu should expand. Locate "**SD Card Suite**". Select download.
Step 4:	Once the SD card suite successfully downloads, open SD card suite on the PC. Select **Tools** from this menu.

Steps	Actions
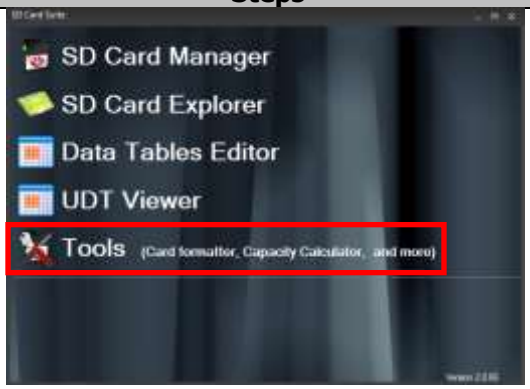	
Step 5: 	Once in the **Tools** menu, the card formatter tab will be open. Select the drive to format from the drop down menu. Name the card "SD". Check the "Format Drive using Windows" box. Once these steps are complete, press "Start". NOTE: Formatting the SD card will erase all existing data.
Step 6	Once the SD card is successfully formatted it can be used with the Centurion Plus.

11 ALARMS

11.1 Fault Conditions Display

Alarm ID	Fault Condition	Fault Description	What to Check
000	**Level Sensor Error**	Float switches were detected to be in the same position (both closed)	• Verify that float switches move freely • Verify that all connections are tight • Verify that the low level float opens on rise and the high level float closes on rise
001	**Disinfection Abort**	User aborted a disinfection cycle during the Preheat mode or Dispensing mode. Alarm will be logged in the alarm history but will not be displayed on the screen following a disinfection *Alarm does not require a reset by the user prior to starting another disinfection cycle	
002	**Over Temperature**	Occurs when the tank thermocouple detects a temperature greater than the **Maximum Temperature** setting for at least 30 seconds	• Verify that the current tank temperature is accurate using a separate thermocouple • Verify that the **Maximum Temperature** setting is at the default value of 197 F • Verify that heating element is not operating when system is in standby. Green LED light on SSR1 will be illuminated when PLC output for heating element is active • Verify the **Disinfection Temperature + Heater Shutoff** does not exceed the **Maximum Temperature** • Verify that both wires for the thermocouple (PLC input 7 & 8) are inserted securely and are not touching

Alarm ID	Fault Condition	Fault Description	What to Check
003	**Preheat Mode Time Out**	The system required > 85 minutes to reach the **Disinfection Temperature** set-point	• Verify that the heating element is functioning properly • Check current switch to ensure indicator light is not flashing rapidly • Check that LED light on SSR1 is illuminated during preheat. LED light should be constant. If light is flashing, excessive current draw through the current switch may have deactivated the heating element • Verify that device draws approximately 1000 W during preheat • If light on SSR1 is not illuminated when the display states "Heater On", verify that the thermostats on the rear of the tank have not tripped. Push red manual reset button to reset thermostats
004	**Excessive Water Loss**	Return flowmeter has detected flow <200 ml/min returning to device from HD machine for 45 seconds	• Verify that the dialysis machine is connected and in rinse mode during dispensing mode • Verify the Pump is functioning during dispensing mode • Verify that water is returning from HD machine periodically during dispensing mode • Verify that water passes to drain through valve SV3 when open. (check that check valve CV2 functions) • Verify that flowmeter functions when RO is producing RO water using diagnostics menu
005	**Temperature Rise Warning**	The system detected that the initial disinfection temperature did not increase by at least 5°F in a 15 minute period	• Verify that the tank filled during the fill period of Preheat • Verify that the low level float is "Open" as the water level rises • Verify that the heating element is functioning properly • Check current switch to ensure indicator light is not flashing rapidly

Alarm ID	Fault Condition	Fault Description	What to Check
			• Check that LED light on SSR1 is illuminated during preheat • Verify that device draws approximately 1000 W during preheat • If performing disinfections back to back, a manual refill of the tank may be required in order to cool tank temperature before starting a disinfection to prevent temperature rise alarm
006	**Tank Drain Failure**	Low float switch was not closed within 20 minutes of "**Dispensing mode**" or "**Manual tank drain**" mode beginning	• Verify that low level float (FS2) shows status as "**Closed**" when tank is empty • Use the manual operation mode (diagnostics page 1) to manually cycle valve "**SV2**". Water in the should be directed to the drain when this valve is open and the pump is running • Verify that the pump provides approximately 1000 mL/min to the drain
007	**Preheat Failure-Tank Low**	Top float switch was not "**Closed**" prior to disinfection set-point being reached during preheat	• Verify that feed RO is on and providing water to the device during preheat mode • Verify that valve "SV1" functions • Verify that high level float switch (FS1) shows "Open" when tank is not full
008	**Internal Battery Low**	PLC internal battery voltage has dropped below threshold	• Replace PLC internal battery
009	**High Flow Alarm**	The measured flow rate returning to the device during dispensing mode has exceeded 2000 mL/min for 45 seconds	• Valve SV4 has failed allowing cold RO water to mix with hot water from the Centurion Plus during dispensing mode
010	**Scheduled Disinfection Aborted until following day**	The "Abort Scheduled Operation" button has been pressed during a day where a disinfection cycle has been scheduled	• The user cannot reset the alarm until midnight passes or power is cycled on the device. Once either of these conditions is met, the user can reset the alarm

11.2 Resetting Alarm Condition

When the controller on the Centurion Plus detects an alarm that requires reset from the list of alarms in Section 11.1, the following steps will be required to clear the alarm.

Screen Display	Operators Action
	When an alarm condition occurs during a disinfection cycle, the following screen will appear. Press the **"EXIT"** button at the bottom of the display to exit back to the home screen. NOTE: All outputs will be shut off during an alarm condition. The disinfection cycle will be disabled until the alarm condition is cleared.
	On the Home screen, the user will be presented with a red border as well as a new button that says **"View Active Alarms"**. Pressing the button will present the user with the list of current alarms.
	Pressing the "**Alarm Reset**" button will clear all active alarms if the alarm condition is no longer present. NOTE: The alarm will not reset if the alarm condition is still active (i.e. Tank Temperature must drop below "**Maximum Temperature**" set-point before the Over temperature alarm will clear).
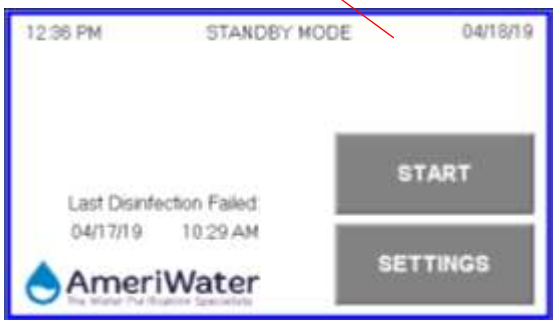	Upon resetting all active alarms, press the escape button to return to the home screen. The home screen will return to normal and the disinfection cycle can be restarted at this time.

12 TROUBLESHOOTING

12.1 Mechanical/Electrical Failures

WARNING: Only authorized persons should attempt to troubleshoot or service the Centurion Plus Heat Disinfection System. Ensure power is disconnected before opening or servicing the control system.

CONTACT INFO: For Technical assistance, contact AmeriWater at 1-800-535-5585.

FAULT CONDITION	POSSIBLE CAUSE	WHAT TO CHECK
Storage tank does not fill during preheat	SV1 Failure	• Verify that water is diverted to tank when SV1 is activated (manually or during start of disinfection cycle)
	SV4 Failure	• Verify that water passes through device when RO is operating and Centurion Plus Heat disinfection device is powered off
	High Level Float Switch (FS1) failure	• With tank empty, verify that FS1 is displayed as "Open" on diagnostics page 2
	RO not in operation during Preheat	• Verify that RO is on and producing RO water at the beginning of the disinfection cycle
	RO not connected to Centurion Plus Heat disinfection device	• Verify that RO is connected to the Centurion Plus as detailed in **Section 4.5**
Heating Element does not turn on when signaled by controller	SSR1 failed open	• Verify that 24 VDC is sent to input of SSR1 when heater is activate (terminals A1 and A2) • Verify that terminal T1 on SSR1 has constant 120 VAC signal
	Thermostats TS1 or TS2 have opened	• Press manual reset on thermostat to reset. • Verify that LED light on SSR1 is on steady when heating element is on (heating element will only turn on when low float is "Open")
	Current switch (CS1) detects excessive current draw (>11 amps)	• Verify Centurion is not performing heat disinfection • Verify current draw of system does not exceed 11 A.
	Relay output from controller has failed open	• Verify that output O7 on PLC switches with the manual

		heater button located on Diagnostics menu page 1 • Output will provide 24 VDC when active
	24 VDC power supply (PS1) failure	• Verify that touch screen is functional when power switch is on. If touch screen is not active, 24 VDC power supply may be shorted or faulty • Check for 24 VDC at output terminals of power supply (PS1)
	120 VAC connection to heating element is loose	• Remove power from device. Locate heating element on side of tank and verify that wires on heating element are secure • With power on, verify that heating element has 120 VAC across terminals when activated
Pump does not turn on	SSR2 failed open	• Verify that 24 VDC is measured across terminals 3 and 4 on SSR2 when pump output (O6) on PLC is active • Verify that constant 12 VDC is measured on terminal 1 between terminal and 0V2
	12 VDC power supply has failed	• Check that fan at rear of device is operating • Verify that 12 VDC is measured at terminal 12V2 and 0V2
	Pump motor failure	• Verify that 12 VDC is measured across terminal 2 of SSR2 and 0V2 on terminal strip • If 12 VDC is measured on output of solid state relay, pump motor has failed
	Relay output from controller has failed open	• Verify that 24 VDC is measured across terminals 3 and 4 on SSR2 when pump output (O6) on PLC is active
	24 VDC power supply failure	• Verify that touch screen is functional • Check for 24 VDC ± 10% between 24V1 and 0V1 on terminal strip.
	Low level float switch has failed "Closed"	• Allow water tank to fill for approximately 2 minutes (when fed by MROC)

		• Check diagnostics page 2, FS2 should be displayed as "Open"
	Active alarms preventing operation	• Verify that there are no active alarms.
Water does not pass through device in standby	Valve SV4 has failed closed	• Shut power off to the Centurion Plus Heat disinfection device. Water should pass through with power off • If water does not pass through device, disconnect RO from Centurion Plus Heat disinfection device to continue patient treatment
	Valve SV1 has failed in the "N.C" position (diverts all water to tank)	• Check float switch status on Diagnostics page 2.
Water does not drain from tank during manual tank drain mode	System pump failure	• See "Pump does not turn on" section
	Valve SV2 failed in normal position (closed to drain)	• Verify there is water in tank of system using diagnostics menu • Manually activate pump and valve SV2. Water should be pumped out of the system drain port when the feed water RO is off • If water does not exit device through drain port valve SV2 is not functioning properly • Manually activate valve SV3 and place the system into tank drain mode as a tank drain back up
	Lower float switch fails open causing false tank level display	• Remove tank lid to verify the water level in the tank
Hot water sent to drain during dispensing mode	Valve SV2 failed open	• Fill the tank on the Centurion Plus with water • Shut off the feed water RO • Manually turn on the pump. Verify that water does not exit the system drain port
MROC break tank over flows during dispensing mode	Valve SV3 fails in normal condition (Open to RO return)	• Fill tank on Centurion Plus with RO water • Shut off MROC • Manually turn on valve SV3 using diagnostics menu • Manually turn on pump • Verify that water exits device through system drain port

HD machine low water alarm when Centurion Plus is in standby mode	Valve SV4 fails closed	• Verify that valve SV4 is not manually activated on diagnostics menu page 1 • Verify that RO is producing approximately 1500 mL/min using the sample port on the RO product hose
	Valve SV1 fails open to tank	• Use diagnostics menu to check tank level • Verify that valve SV1 is not manually activated in diagnostics menu • Verify that water is not exiting the Centurion Plus via the over flow port
	Valve SV3 fails open to drain	• Disconnect RO reject line from Centurion Plus. Verify water does not pass through system drain port
Rear fan does not function (Fan runs at all times when the rocker switch in on position)	12 VDC power supply (PS2) failure	• Locate power supply labeled PS2 in control panel • Check for 12 VDC between pins 2 and 4 on power supply
	Mechanical failure of fan	• Verify 12 VDC power supply functionality • Check that connector is plugged in • Check that fan wires are not loose
Leak at push fit connections	Tube end not cut square	• Remove tube from connector. Verify end of tube is cut square
	Tube not fully inserted	• Verify that tube or fitting is fully inserted into fitting

12.2 Valve Position

Mode	Valve Position
Standby	• SV1: Off • SV2: Off • SV3: Off • SV4: Off
Preheat Mode (Tank Full)	• SV1: Off • SV2: Off • SV3: Off • SV4: Off
Preheat Mode (Tank Filling)	• SV1: On • SV2: Off • SV3: Off • SV4: Off
Dispensing Mode	• SV1: Off • SV2: Off • SV3: On • SV4: On
Manual Tank Drain	• SV1: Off • SV2: On • SV3: Off • SV4: Off

12.3 Pump/Heater Status

Mode	Heater and Pump Status
Standby	• Pump: Off • Heater: Off
Preheat Mode (FS2 Closed)	• Pump: Off • Heater: Off
Preheat Mode (FS2 Open)	• Pump: Off • Heater: On
Dispensing Mode (FS2 Closed)[1]	• Pump: Off • Heater: Off
Dispensing Mode (FS2 Open)	• Pump: On • Heater: Off
Manual Tank Drain (FS2 Closed)[1]	• Pump: Off • Heater: Off
Manual Tank Drain (FS2 Open)	• Pump: On • Heater: Off

[1]Pump shuts off 50 seconds after FS2 closes

12.4 Float Switch Status

Water Level	Valve Position
Tank Empty	• FS1[1]: Open • FS2[2]: Closed
Tank Filling	• FS1: Open • FS2: Open

Tank Full	• FS1: Closed • FS2: Open

[1]FS1 refers to high level float switch
[2]FS2 refers to low level float switch

12.5 Setting Current Switch

The Centurion Plus is equipped with a current switch that monitors the current draw from the device to prevent the heater from activating when the current draw exceeds 11 A. This is intended to prevent the MROC and Centurion Plus from operating their heating element at the same time.

NOTE: This feature only works if the MROC is plugged into the power outlet located at the rear of the Centurion Plus Heat disinfection device.

CAUTION: The system must be powered on when adjusting the current switch. Only trained personnel should attempt this adjustment.

Steps	Actions
Step 1:	Ensure the feed water RO is powered on and operating. Navigate to diagnostics menu page 1 and manually activate the tank fill solenoid valve (SV1).
Step 2:	Allow the tank to fill for approximately 2 minutes. Verify that the bottom float switch (FS2) is shown as "Open" on diagnostics page 2. Manually shut off valve SV1.
Step 3:	Remove the side covers from the device and unscrew the fasteners for the top panel shown. Carefully move the top panel to the side to expose the current switch.

Steps	Actions
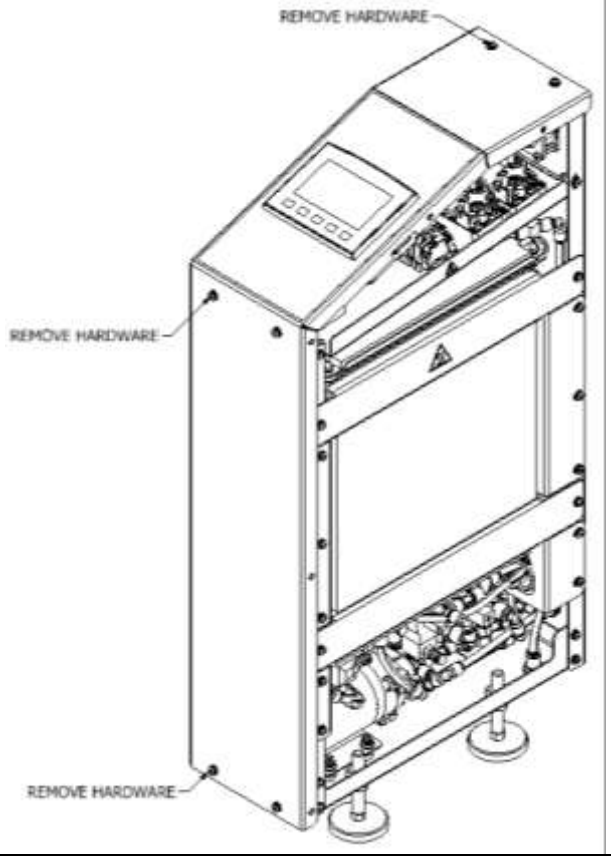	
Step 4: 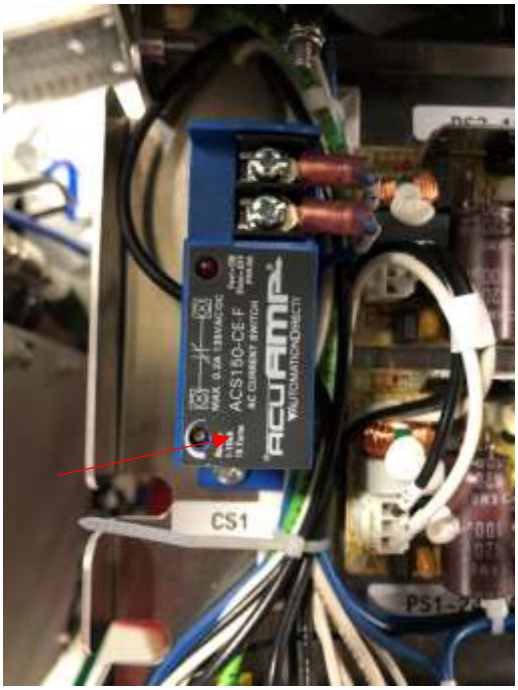	Locate the adjustment screw on the current switch (CS1).
Step 5:	Stop the MROC and place the system into heat disinfection mode. Wait

Steps	Actions
	approximately 5 minutes for the heating element to turn on.
Step 6: 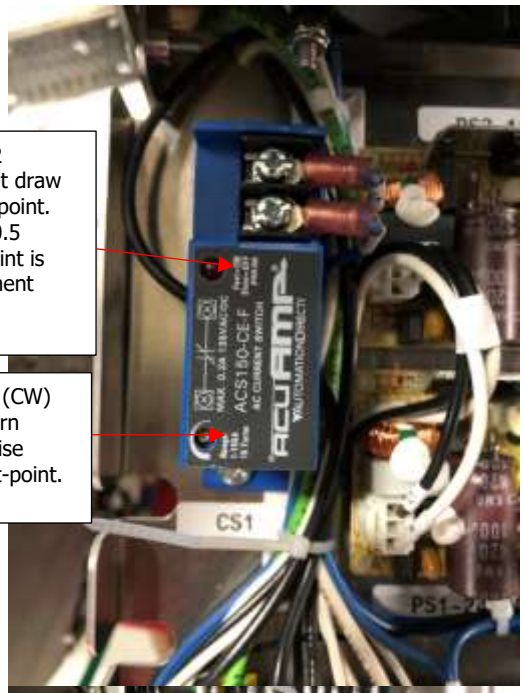  	Manually activate the heater on the Centurion Plus using diagnostics page 1. Verify that the red LED light on the current switch is flashing rapidly and the Green LED on SSR1 is off. NOTE: If the green LED on SSR1 flashes rapidly, turn off the heating element to avoid blowing the fuses on the Centurion Plus.
Step 7:	If the Green LED on SSR1 flashes, or is illuminated, use a small flat head screwdriver to adjust the screw on the current switch. Turn the screw clockwise to lower the cut-off current or turn the screw counter clockwise to increase the

Steps	Actions
	cut-off current. Turn the screw until the green LED on SSR1 goes out completely.
Step 8:	Stop the heat disinfection mode on the MROC. Place the MROC in to normal operation.
Step 9:	Verify that the heating element on the Centurion Plus Heat disinfection device is activated while the MROC is running in normal operation. NOTE: Green LED on SSR1 will be illuminated when heater is on.
Step 10:	With the current switch set, reinstall the top cover and side covers onto the Centurion Plus Heat disinfection device. Be sure to manually shut off the heating element using diagnostics menu page 1.
Step 11:	Navigate to the diagnostics menu page 2 and manually drain the tank on the Centurion Plus.
Step 12:	Return the device to service.

13 SPARE PART LISTING

13.1 Exploded View

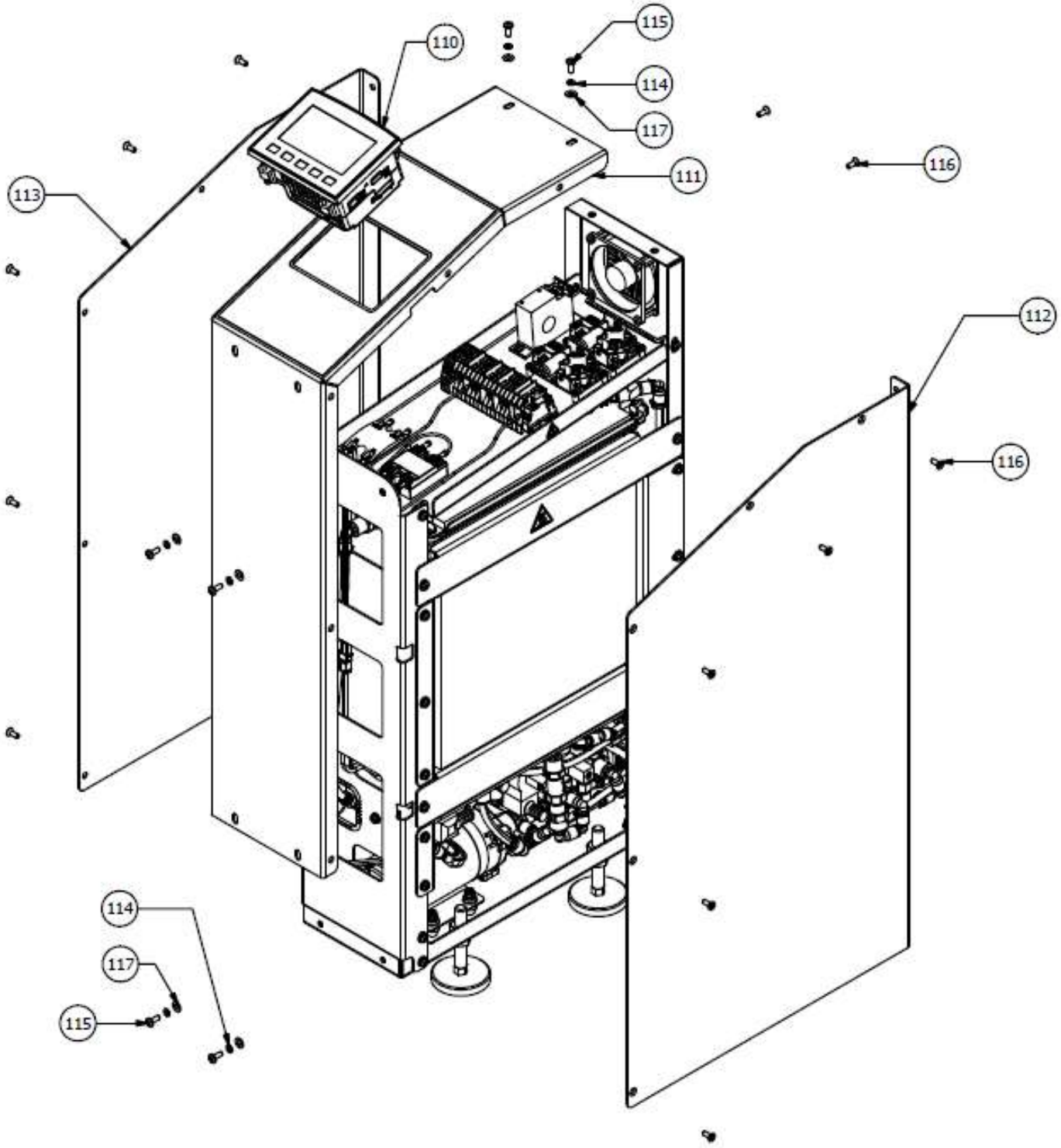

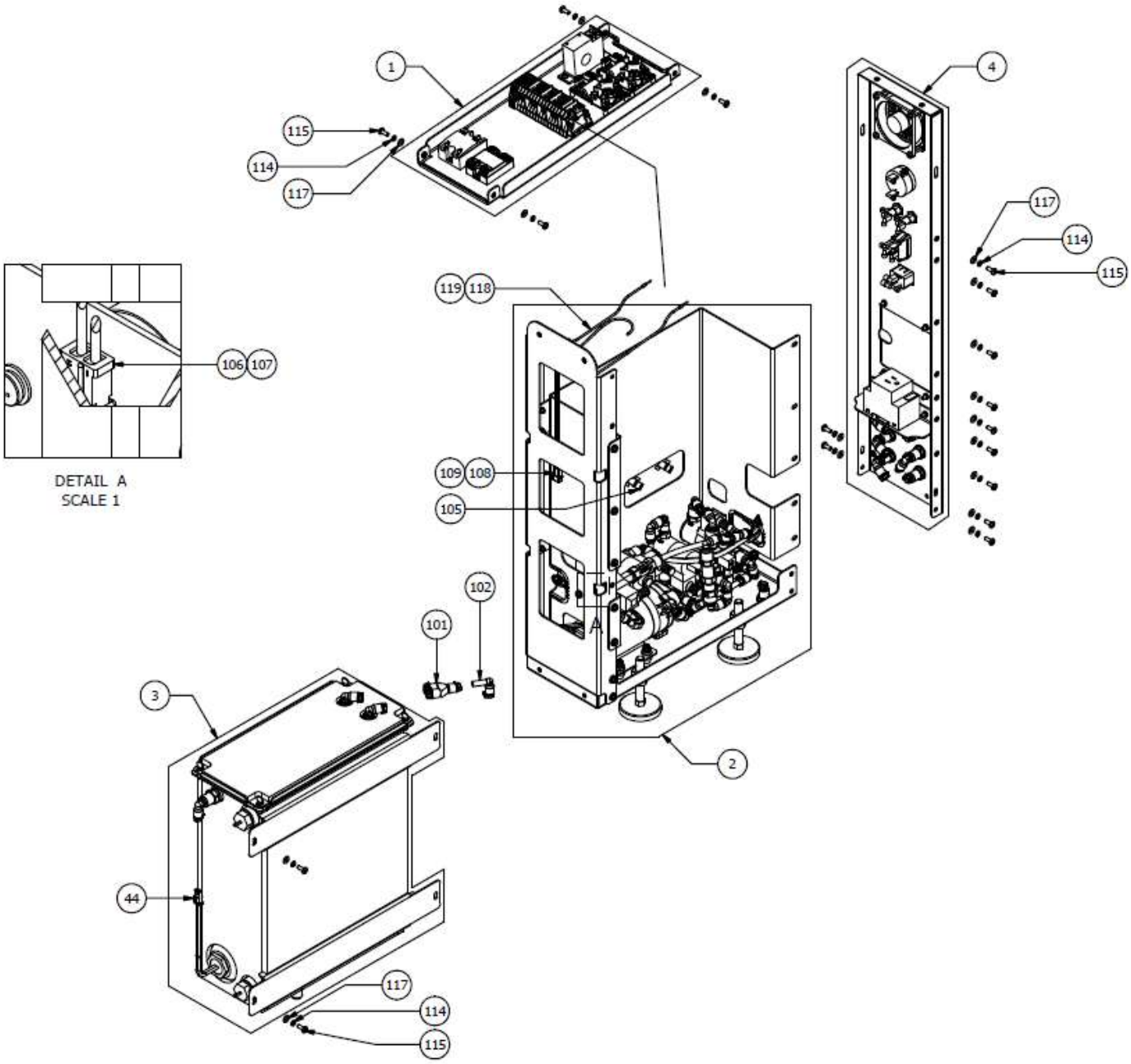
1
115
114
117
4
117
114
115
119
118
106
107
DETAIL A
SCALE 1
109
108
105
102
101
A
3
2
44
117
114
115

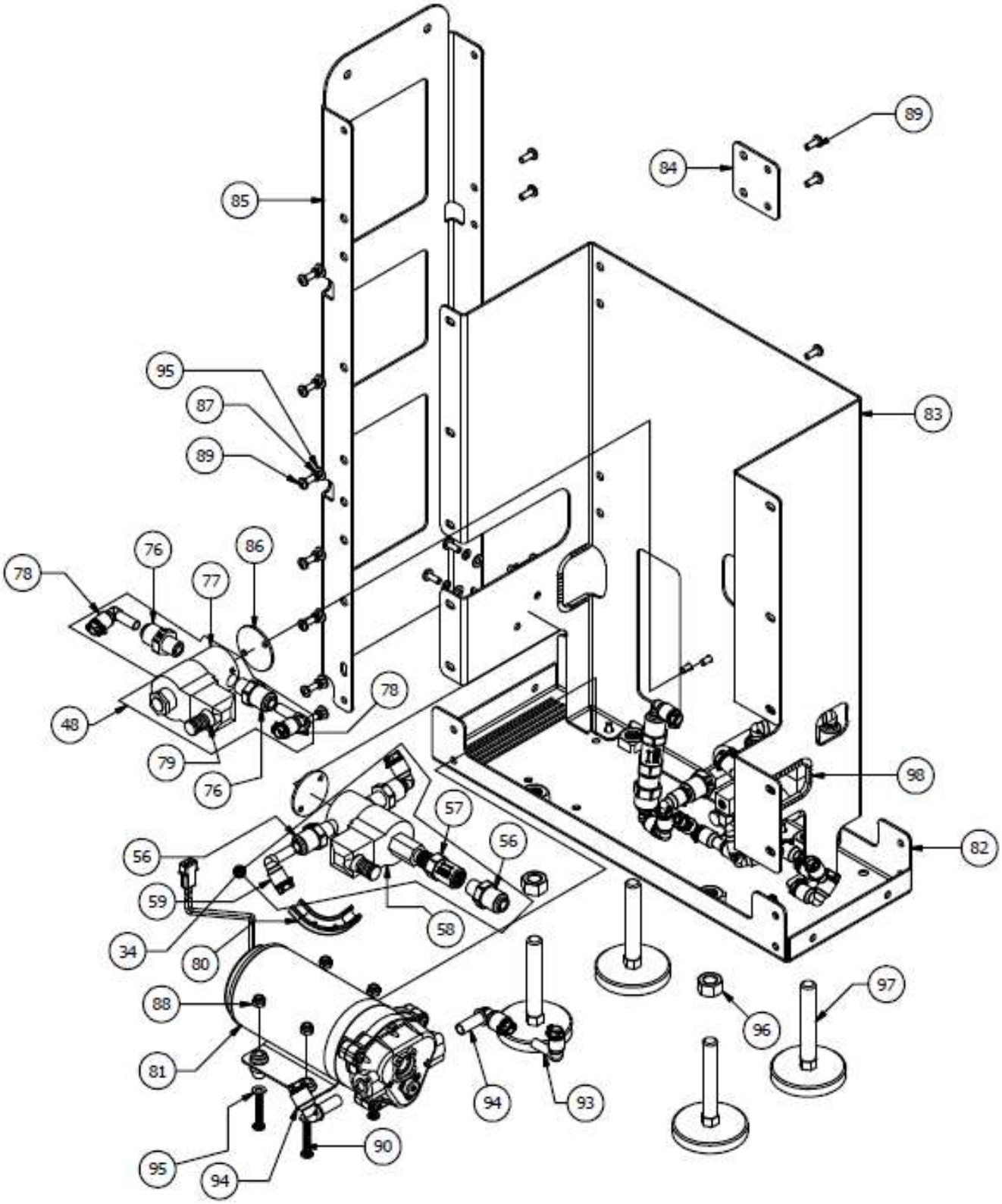
89
84
85
95
87
89
83
76
86
78
77
78
48
79
76
98
57
56
56
82
59
58
34
80
97
88
96
81
94
93
95
90
94

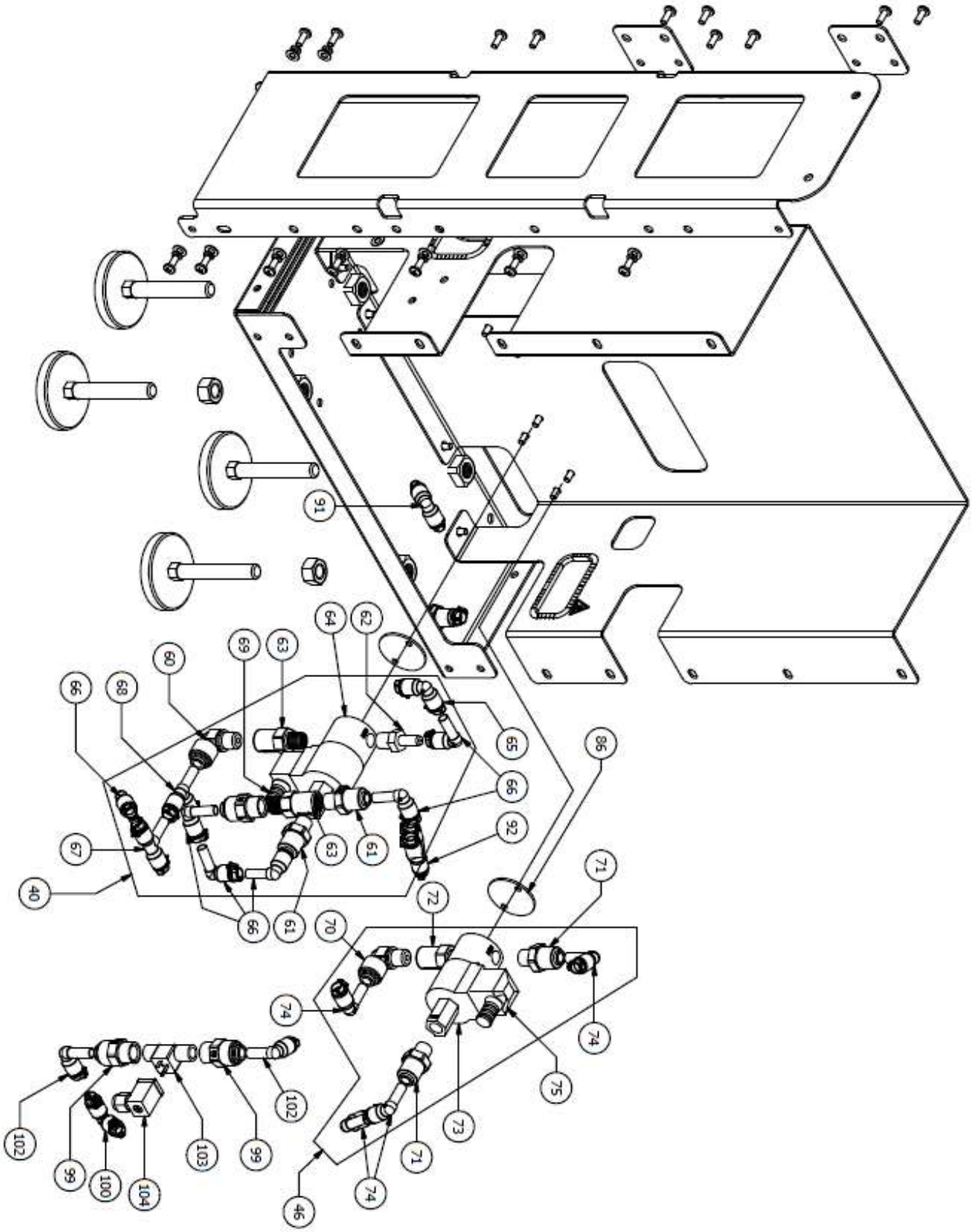
91
64
62
69
63
60
66
68
65
86
66
92
67
63
61
40
66
61
71
72
70
74
74
75
73
71
74
46
102
102
99
100
104
103
99

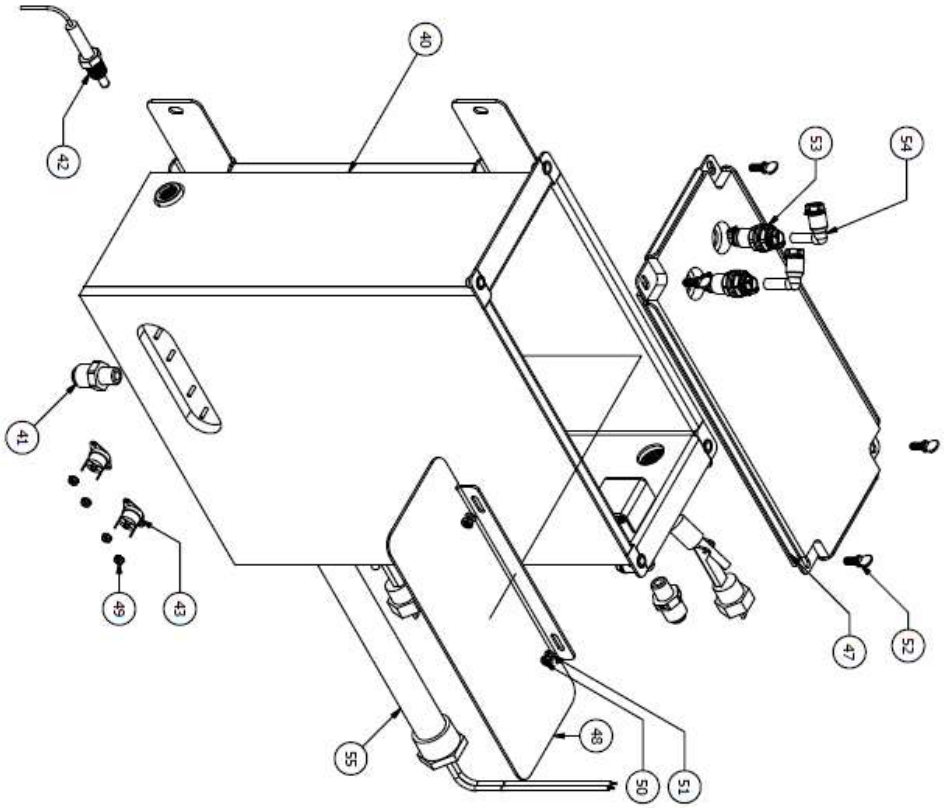
40
42
53
54
41
49
43
47
52
55
48
50
51

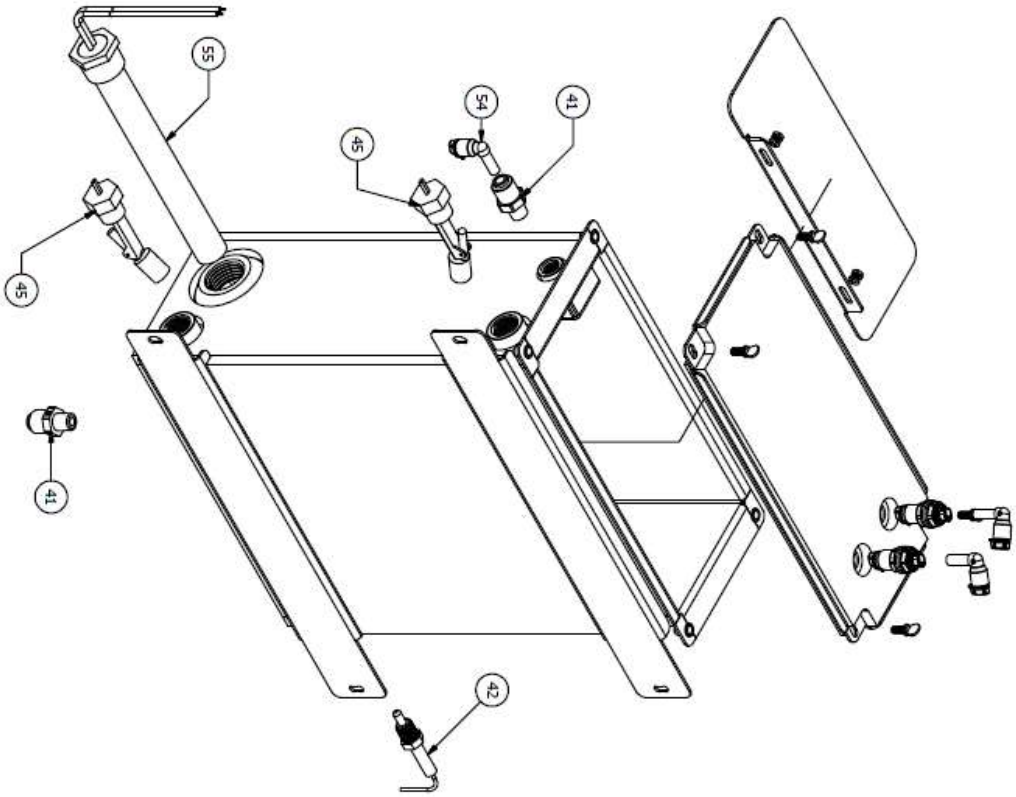
55
54
41
45
45
41
42

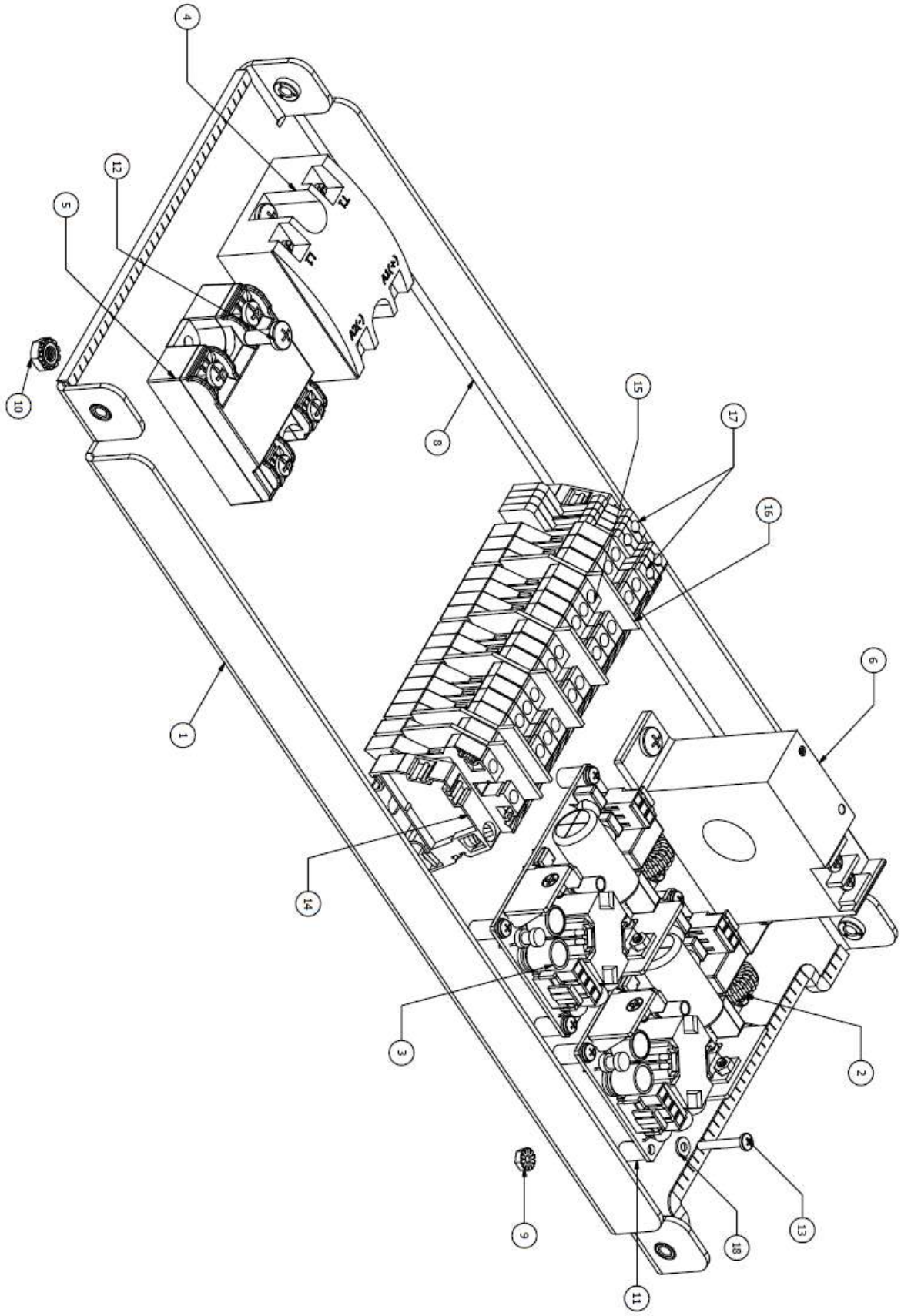
1
2
3
4
5
6
8
9
10
11
12
13
14
15
16
17
18
AB(+)
AB(-)

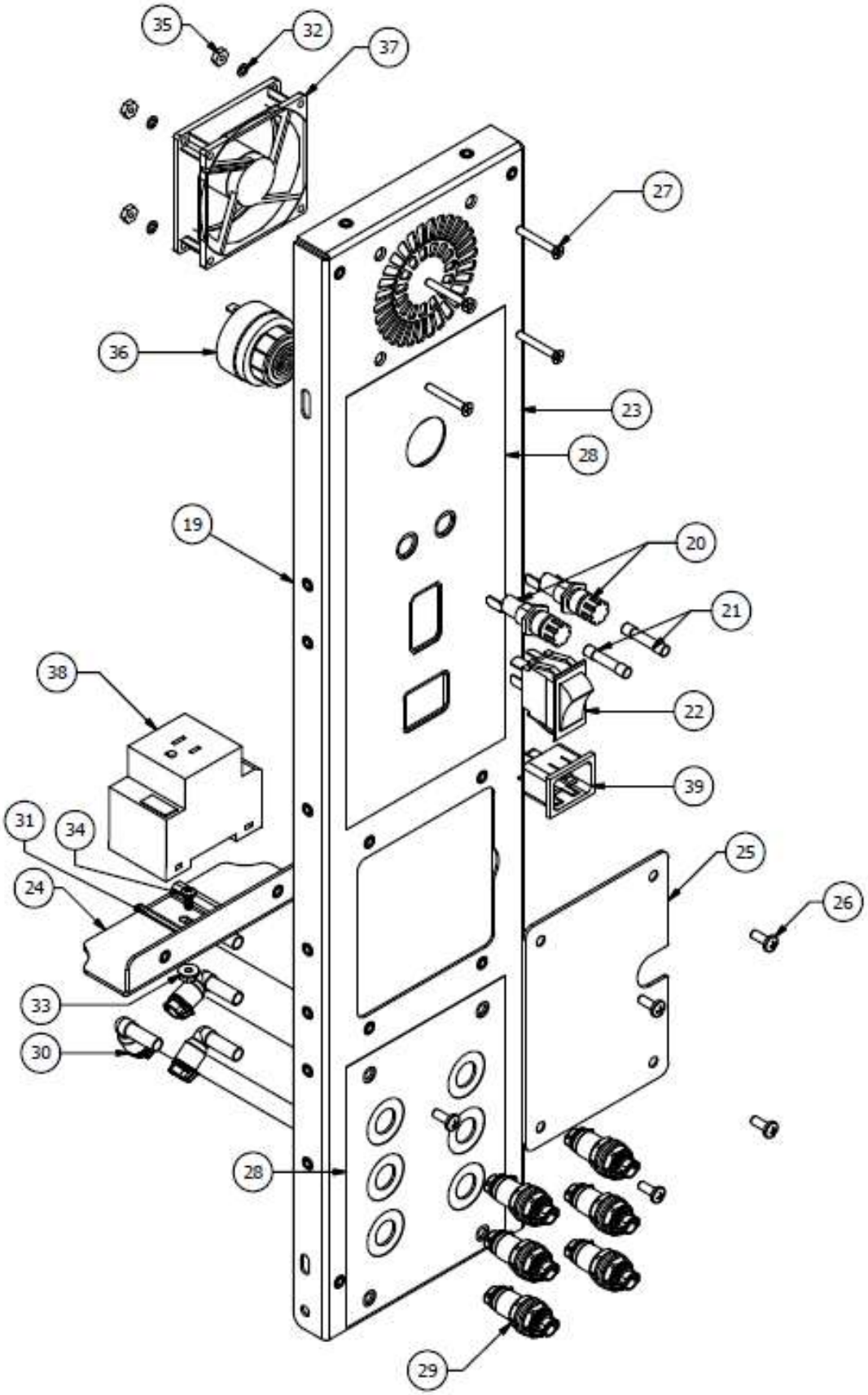
35
32
37
27
36
23
28
19
20
21
38
22
39
31
34
25
24
26
33
30
28
29

ITEM	PART NUMBER	DESCRIPTION
1	001-053-0008	CONTROL ASSY,END-2-END
2	062-0001	POWER SUPPLY,12VDC,40W,OPEN FRAME
3	062-0002	POWER SUPPLY,24VDC,40W,OPEN FRAME
4	064-0004	RELAY,SOLID STATE, SPST, NO, 25A, 42-265 V OUTPUT, 3-32 VDC CONTROL
5	064-0005	RELAY,SOLID STATE, SPST, NO, 3A, 3.5-60VDC OUTPUT, 3.5-32 VDC CONTROL
6	065-0003	CURRENT SWITCH,FIXED CORE,1A TO 150A, N.C. OUTPUT
7	066-0006	CONNECTOR,JST CRIMP PIN, FOR VHR CONNECTOR
8	090-0021	ENCLOSURE,CONTROL SYSTEM SHELF,N2N
9	092-0009	NUT,LOCKING,#4-40,STAR WASHER,18-8 SS
10	092-0010	NUT,10-32,EXTERNAL TOOTH LOCK WASHER,18-8
11	092-0013	SPACER,NYLON,0.115" HOLE X 3/8" LONG
12	093-0007	SCREW,#10-32 X 1/2", 18-8 STAINLESS STEEL,PAN HEAD,PHILLIPS
13	093-0011	SCREW,4-40 X 3/4",PAN HEAD,PHILLIPS,18-8 SS
14	66-0064	TERMINAL END BLOCK ASSEMBLY
15	66-0065	TERMINAL BLOCK, SINGLE, ALTECH, 35MM, DIN
16	66-0066	ISOLATION PARTITION PLATE, ALTECH 35 MM
17	66-0067	GROUND TERMINAL BODY ASSEMBLY
18	92-0094	WASHER, #4, NYLON
19	001-053-0009	REAR PANEL ASSY, END-2-END
20	060-0005	FUSE HLDR,PANEL MOUNT,.25 QC,250 V,20 A
21	063-0006	FUSE CERM, 12A, 250VAC, 125VDC, 3AB,.25" X 1.25"
22	065-0002	SWITCH,ROCKER,DPST,15 A, 125 V
23	090-0020	ENCLOSURE,REAR BULKHEAD,N2N
24	090-0023	ENCLOSURE,HYDRAULIC/ELECTRICAL DIVIDER,N2N
25	090-0024	ENCLOSURE,POWER CORD INLET COVER,N2N
26	093-0007	SCREW,#10-32 X 1/2", 18-8 STAINLESS STEEL,PAN HEAD,PHILLIPS
27	093-0009	SCREW,8-32 X 1.25",FLAT,PHILLIPS,18-8 SS
28	099-0016	LABEL,END-2-END,REAR PANEL
29	10-L279	LEGRIS BULKHEAD UNION, 5/16T,W/SAFETY CLIP
30	10-L381	LEGRIS PLUG-IN EL, 5/16T X 5/16 STEM (SMOOTH STEM),W/SAFETY CLIP
31	64760151	DIN RAIL,MOUNTING
32	92-0024	WASHER,#8,LOCK,SS
33	92-0097	NUT, 8-32, FLANGED, SS
34	92-0110	SCREW,8-32 X .375,PAN HEAD,PHILLIPS,SS
35	92531201	NUT,8-32,HEX,SS
36	999-3676	ALARM, 80 DB @ 2 FT, PANEL MOUNT,6-28 VDC, 0.25" QD TERMINALS
37	999-3677	FAN,12VDC,OD8025-12LB
38	999-3678	PWR ENT RCPT, NEMA5-15, DIN, SCREW TERMINAL
39	999-3679	PWR ENT RCPT, IEC320-C20, PANEL MOUNT,.25 QC
40	001-085-0034	TANK ASSY,END-2-END

41	010-0015	MALE CON.5/16" T X 1/4" MNPT,TRUE-SEAL
42	039-0001	THERMOCOUPLE,K TYPE, 1/4 NPT,GROUNDED
43	039-0002	THERMOSTAT,MANUAL RESET,194 F,.25 QC
44	066-0021	CONNECTOR, TYCO MATE N LOCK, 2 CIRCUIT, SOCKET HOUSING, NATURAL
45	067-0001	SWITCH,FLOAT,1/2" NPT,POLYPROPYLENE,105 C WORKING TEMP
46	090-0017	TANK ASSY,316 SS,N2N
47	090-0029	LID,TANK,N2N
48	090-0030	BAFFLE,TANK,N2N,316 SS
49	092-0009	NUT,LOCKING,#4-40,STAR WASHER,18-8 SS
50	092-0011	NUT,#10-32,316 SS,HEX HEAD
51	092-0012	WASHER,LOCK,#10,316 SS
52	093-0006	THUMB SCREW,#10-32 X 1/2"
53	10-L279	LEGRIS BULKHEAD UNION, 5/16T,W/SAFETY CLIP
54	10-L381	LEGRIS PLUG-IN EL, 5/16T X 5/16 STEM (SMOOTH STEM),W/SAFETY CLIP
55	999-3675	HEATING ELEMENT, 1000W, 120VAC,1" NPT,8" LENGTH
56	010-0015	MALE CON.5/16" T X 1/4" MNPT,TRUE-SEAL
57	055-0006	VAL,CHECK,1/4" MNPT X 1/4" FNPT,316 SS,0.3 PSI CRACKING
58	059-0002	VAL,SOL,1/4"NPT,120VAC,3 WAY DIRECT ACTING,DIVERTING
59	10-L381	LEGRIS PLUG-IN EL, 5/16T X 5/16 STEM (SMOOTH STEM),W/SAFETY CLIP
60	010-0014	MALE ELBOW,5/16" T X 1/4" MNPT,KYNAR,TRUE-SEAL
61	010-0015	MALE CON.5/16" T X 1/4" MNPT,TRUE-SEAL
62	042-0009	FLOW RESTRICTOR,FIX ORIFICE,1 L/MIN,5/16" STEM X 1/4" NPT,CPVC
63	055-0006	VAL,CHECK,1/4" MNPT X 1/4" FNPT,316 SS,0.3 PSI CRACKING
64	059-0002	VAL,SOL,1/4"NPT,120VAC,3 WAY DIRECT ACTING,DIVERTING
65	10-L204	LEGRIS UNION EL, 5/16T X 5/16T,W/SAFETY CLIP
66	10-L381	LEGRIS PLUG-IN EL, 5/16T X 5/16 STEM (SMOOTH STEM),W/SAFETY CLIP
67	10-L407	LEGRIS PLUG-IN BRANCH TEE, 5/16T X 5/16 STEM,W/SAFETY CLIP
68	10-L408	LEGRIS PLUG-IN RUN TEE, 5/16T X 5/16 STEM,W/SAFETY CLIP
69	66932109	WIRE HARNESS,DIN,STD ISO,6FT,STRIPPED ENDS
70	010-0014	MALE ELBOW,5/16" T X 1/4" MNPT,KYNAR,TRUE-SEAL
71	010-0015	MALE CON.5/16" T X 1/4" MNPT,TRUE-SEAL
72	055-0007	VAL,CHECK,1/4" MNPT X 1/4" FNPT,316 SS,10 PSI CRACKING
73	059-0002	VAL,SOL,1/4"NPT,120VAC,3 WAY DIRECT ACTING,DIVERTING
74	10-L381	LEGRIS PLUG-IN EL, 5/16T X 5/16 STEM (SMOOTH STEM),W/SAFETY CLIP
75	66932109	WIRE HARNESS,DIN,STD ISO,6FT,STRIPPED ENDS
76	010-0015	MALE CON.5/16" T X 1/4" MNPT,TRUE-SEAL
77	059-0003	VAL,SOL,1/4" NPT,120VAC,NO,DIRECT ACTING
78	10-L381	LEGRIS PLUG-IN EL, 5/16T X 5/16 STEM (SMOOTH STEM),W/SAFETY CLIP
79	66932109	WIRE HARNESS,DIN,STD ISO,6FT,STRIPPED ENDS
80	010-0172	CLIP,FLOW BEND,8 MM
81	080-0012	PUMP,AQUATEC,1.4 LPM,8852,3/8 JG,110 PSI BYPASS,12 VDC,STEEL MOUNT PLATE

82	090-0019	ENCLOSURE,BASE,N2N
83	090-0022	ENCLOSURE, MAIN STRUCTURE,N2N
84	090-0025	ENCLOSURE,SUPPORT BRACKET,N2N
85	090-0028	ENCLOSURE,FRONT INNER SUPPORT,N2N
86	090-0031	SHIM,SOLENOID VALVE,END TO END,ALUMINUM
87	092-0002	WASHER,LOCK,#10,18-8 SS
88	092-0020	NUT,10-32,NYLOCK,18-8 SS
89	093-0007	SCREW,#10-32 X 1/2", 18-8 STAINLESS STEEL,PAN HEAD,PHILLIPS
90	093-0008	SCREW,10-32 X 1.25",PAN,PHILLIPS,18-8 SS
91	10-L204	LEGRIS UNION EL, 5/16T X 5/16T,W/SAFETY CLIP
92	10-L304	LEGRIS,SPLITER,Y, DIVIDER, 5/16T X 5/16T,W/SAFETY CLIP
93	10-L381	LEGRIS PLUG-IN EL, 5/16T X 5/16 STEM (SMOOTH STEM),W/SAFETY CLIP
94	10-L382	LEGRIS PLUG-IN EL, 5/16T X 3/8 STEM (SMOOTH STEM),W/SAFETY CLIP
95	92531901	WASHER,#10 FLAT,SS
96	92730117	NUT,1/2-13,HEX,SS
97	999-3680	FOOT,LEVELING, 1/2"-13, 3" THRD, 2.5" BASE
98	999-3685	SLOTTED GROMMET EDGING,0.062"-0.99" PANEL,POLYETHYLENE,100 FT REEL
99	010-0021	FEMALE CON,5/16" T X 1/4" FNPT,KYNAR,TRUE-SEAL
100	10-L204	LEGRIS UNION EL, 5/16T X 5/16T,W/SAFETY CLIP
101	10-L304	LEGRIS,SPLITER,Y, DIVIDER, 5/16T X 5/16T,W/SAFETY CLIP
102	10-L381	LEGRIS PLUG-IN EL, 5/16T X 5/16 STEM (SMOOTH STEM),W/SAFETY CLIP
103	41-0052	FLOWMETER,TURBINE, LOW FLOW, .026-.65 GPM, CENTURION
104	066-0009	CONNECTOR,DIN,SERIES C25,2 POLE + GND,BLACK NBR GASKET,UL 94-V0 RATED
105	066-0010	90 DEG FLAG TERMINAL,0.25" QUICK DISCONNECT,22-18 AWG,FULLY INSULATED
106	066-0021	CONNECTOR, TYCO MATE N LOCK, 2 CIRCUIT, SOCKET HOUSING, NATURAL
107	066-0022	SOCKET, TYCO MATE N LOCK, BRASS, PRE-TIN,20-14 AWG
108	066-0210	PIN, TYCO MATE N LOCK, BRASS, PRE-TIN,20-14 AWG
109	066-0211	CONNECTOR, TYCO MATE N LOCK, 2 CIRCUIT, PIN HOUSING, NATURAL
110	069-0001	PLC,UNITRONICS,V430,RELAY OUTPUT,12 INPUT,8 OUTPUT,24 VDC
111	090-0018	ENCLOSURE,FRONT PANEL,N2N
112	090-0026	ENCLOSURE,SIDE COVER,RIGHT,N2N
113	090-0027	ENCLOSURE,SIDE COVER,LEFT,N2N
114	092-0002	WASHER,LOCK,#10,18-8 SS
115	093-0007	SCREW,#10-32 X 1/2", 18-8 STAINLESS STEEL,PAN HEAD,PHILLIPS
116	093-0010	SCREW,#10-32 X 1/2",FLAT,PHILLIPS,18-8 SS
117	92531901	WASHER,#10 FLAT,SS
118		HEATER WIRE
119		PANDUIT

13.2 Consumables

Part Number	Description
063-0006	FUSE CERM, 12A, 250VAC, 125VDC, 3AB,.25" X 1.25"
999-3686	BATTERY,CR2450N,3V
08-0025	TUBING, FEP 8MM O.D X 6MM I.D. CLEAR

14 Appendix

14.1 How to use push-fit connectors

Installation	
Ensure that the tubing is cut square. Push the tube into the fitting until it stops.	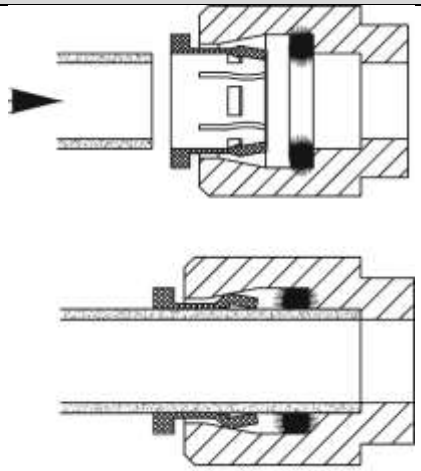
Removal	
Push the collet on the fitting in and pull the tube straight out of the fitting. NOTE: If a safety clip is installed on the fitting, cut the safety clip and remove existing clip. Replace with new clip prior to inserting tubing into fitting.	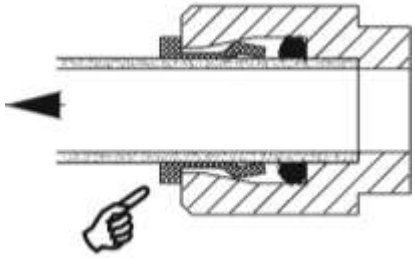

⚠ WARNING

This product can expose you to chemicals such as vinyl chloride (used in the production of PVC) or Nickel (used in the production of stainless steel), that are known to the State of California to cause cancer. For more information go to www.P65Warnings.ca.gov.

Dear Valued Customer,

California Proposition 65 (Prop 65) is the Safe Water and Toxic Enforcement Act of 1986. The State of California began enforcing amendments to California Prop 65 at the end of August 2018. Prop 65 requires manufacturers to provide a clear and reasonable warning to residents of California about chemicals used in products that they purchase that are included on the Prop 65 Chemical List. The chemicals included on the list are chemicals that are known to the State of California to cause cancer, birth defects, or other reproductive harm. One such chemical is Vinyl Chloride, a compound used to produce Polyvinyl Chloride (PVC). The AmeriWater system you have purchased may contain PVC or stainless steel parts.

While warnings are only required in the State of California, AmeriWater has initiated the use of Prop 65 labeling for all products to ensure compliance with California regulations. Please note that the above warning does not necessarily mean that the product that you have purchased is unsafe. Products that have been cleared for market by FDA have been determined to be safe and effective by the United States Food and Drug Administration. The warning is simply a requirement by the State of California. If you wish to obtain additional information, please visit: p65warnings.ca.gov. You may also contact your AmeriWater representative if you have any questions.

Thank you for your understanding and we look forward to continuing to serve you.