AmeriWater
The Water Purification Specialists

Operation & Maintenance Manual

STORAGE TANKS
HEALTHCARE

3345 Stop 8 Rd, Dayton, OH 45414 | 800 535 5585 | www.ameriwater.com
Manufactured With Pride in the USA

098-0001 Rev C

TABLE OF CONTENTS

1 CONTACT DETAILS

For all service, spares and consumables enquiries contact:

AmeriWater
3345 Stop 8 Rd
Dayton, Ohio 45414
Tel No. 800-535-5585

(Or your local authorized **AmeriWater** dealer)

Useful Telephone Nos.

Tel No..... Contact Name:.....

Tel No..... Contact Name:.....

2 HEALTH AND SAFETY

These instructions provide information on safe working practices. These should be adopted to ensure safe and continuing operation of the equipment. The manual should be read and understood before the equipment is used.

AmeriWater reserves the right to make engineering refinements to the equipment that may not be described herein. Any questions that cannot be answered specifically by these instructions should be addressed to AmeriWater or their agents for a response.

AmeriWater will not accept any responsibility for any equipment supplied or the actions of such equipment or associated system if un-authorized modifications are carried out that are considered by AmeriWater to compromise the integrity of the original design philosophy.

If the unit's performance becomes impaired and any remedial work appears to be outside the scope of this manual, then seek advice from AmeriWater, quoting the unit's serial number (Refer to Section 1 Contact Details).

The unit must not be disassembled in any way unless carried out by an AmeriWater technician or authorized trained personnel.

During normal operation, the unit must not be operated with the control panel door open for applicable models.

The **'Caution'** symbol is used throughout this manual to highlight where particular care must be taken to ensure the safety of the operator, and the protection provided by the equipment, is not impaired.

2.1 Explanation of Symbols and References

DANGER: **This symbol refers to any immediate dangers. Failure to follow the specified procedure could result in serious personal Injury. Extreme caution should be observed when conducting any activity where this symbol is shown. Work should be completed by a trained competent person.**

WARNING: **This symbol refers to a possible danger that threatens the safety and life of persons. Caution should be observed when conducting any activity where this symbol is shown. It is recommended work should be completed by a trained competent person.**

CAUTION: This symbol refers to a possibly hazardous situation. Failure to observe these references may result in minor injuries and/or damage to property.

NOTE: This symbol points out important information for working with the system properly. Failure to observe these references may result in malfunctions in the system or impact on the environment or result in injuries.

2.2 Additional Safety Requirements

National or provincial specific requirements/standards and regulations must be observed.

2.3 Usage in Accordance with Intended Purpose

This equipment is intended for indoor use only in a non-hazardous environment to provide water storage for the purposes of water treatment equipment or other equipment.

Any references in this manual to installation requirements/procedures are provided as information only. Installation of the unit will only be carried out by AmeriWater or an approved installation technician.

If the unit is used in a manner not specified by AmeriWater or procedures not followed as detailed in this manual, the protection provided by this equipment may be impaired.

WARNING: **DO NOT USE THIS EQUIPMENT IN ANY OTHER MANNER THAN THOSE SPECIFIED UNDER THIS SECTION.**

CAUTION: Some parts of the system could be under pressure. Always make sure the pressure has dispersed from the unit before repairs and maintenance tasks are carried out.

2.4 Operating Staff

Only persons who have read and understood these Instructions should operate the unit. When operating the unit, it is important to strictly observe the safety information.

2.5 Safety Information for Maintenance Tasks

The owner of the unit must take care to ensure that only authorized personnel who have been sufficiently informed for the task at hand perform all maintenance and inspection tasks.

2.6 Disposing of System Parts and Operating Materials

Refer to Section **10.1** for details.

2.7 Unauthorized Conversion and Manufacturing Replacement Parts

Conversion or modification of the system is only permitted with the approval of AmeriWater. Original replacement parts authorized / supplied by the manufacturer enhance safety and ensure design performance. The use of unauthorized parts may void the warranty on the unit, impair its performance or compromise the safety of those operating it.

2.8 Warranty Claims and Liability

The buyer has a one-year warranty on all equipment and parts, excluding non-durable components (e.g., filter cartridges, reverse osmosis membranes, filter media, consumable chemicals, etc.); provided that the system is not subject to abuse, misuse, alteration, neglect, freezing, accident or negligence; and provided further that the system is not damaged as the result of any unusual force of nature such as, but not limited to, flood, hurricane, tornado, or earthquake.

The warranty covers the replacement of equipment and/or parts only. The warranty does not cover labor charges or travel expenses resulting from the service of equipment. The manufacturer is excused if failure to perform its warranty obligations is the result of strikes, government regulation, materials shortages, or other circumstances beyond its control.

To obtain warranty service, notice must be given to the manufacturer within thirty days of the discovery of the defect.

There are no warranties on the AmeriWater system beyond those specifically described above. All implied warranties, including any implied warranty of merchantability or of fitness for a particular purpose are disclaimed to the extent they might extend beyond the above periods. The sole obligation of the manufacturer under these warranties is to replace or repair the component or part which proves to be defective within the specified time period, and the manufacturer is not liable for consequential or incidental damages. No dealer, agent, representative, or other person is authorized to extend or expand the warranties expressly described above.

Some states do not allow limitations on how long an implied warranty lasts or exclusions or limitations of incidental or consequential damage, so the limitations and exclusions in the warranty may not apply to you. This warranty gives you specific legal rights, and you may also have other rights, which vary from state to state.

3 SPECIFICATIONS

3.1 About Your System

The ***healthcare storage tank*** incorporates equipment to retain water received from a water purification system and circulate around a distribution loop using a pump located at the base of the unit. Refer to the table below for a list of products available.

Models available	Number of float switches	Tank volume (gallons)	Flow rate @ 30 PSI (GPM)
00HC-0090-PRV	2	55	22
00HC-0091	4	55	28
00HC-0093	4	100	28
00HC-0095	4	185	28
00HC-0097	4	185	78
0185-8000 with 80-0289	2	55	22

3.2 Controls

All the processes of the storage tank unit are controlled automatically via float switches and the unit operates via distribution pump, which, depending on the model, displays systems performance data and unit status via LED indicators, control panel, and/or mobile app.

NOTE: This manual is intended to reference information relevant to AmeriWater product. For more in-depth discussion on menus, user-interface, and technical information regarding pumps, please refer to the Grundfos® manufacturer's manual on operation and installation for various pump models included with your system. If documentation is lost or was not provided, you may refer to a digital copy online located at www.grundfos.com.

To determine your pump model, refer to the following table.

Models	Pump Models
00HC-0090-PRV	Grundfos® SCALA2 3-45
00HC-0091	Grundfos® CME 5-3
00HC-0093	Grundfos® CME 5-3
00HC-0095	Grundfos® CME 5-3
00HC-0097	Grundfos® CME 10-2
0185-8000 with 80-0289	Grundfos® SCALA2 3-45

3.3 Dimensions

Please note that spatial dimensions are at nominal and may vary during installation. Variation with rotating components (i.e., tank vent filters) has been taken into consideration.

Models	Height (ins)	Width (ins)	Depth (ins)
00HC-0090-PRV	63.25+/- 12	33.5	26.5 +/- 6
00HC-0091	63.25+/- 12	39.75	25.5
00HC-0093	70.25 +/- 12	49.5	39.75
00HC-0095	102 +/- 12	49.5	32.75
00HC-0097	102 +/- 12	52.5	32.75
0185-8000	45.5 +/- 12	34 +/- 6	24.5 +/- 3

3.4 Water Services Connections

Models	Inlet	Ozone	Tank Drain Valve	System Outlet	Recirculation Return	Tank Vent Filter Drain
00HC-0090-PRV	¾″ male garden hose thread	N/A	¾″ female socket / pipe thread	¾″ female socket / pipe thread union	¾″ female pipe thread elbow	N/A (overflow has ¾″ male hose barb)
00HC-0091	¾″ male garden hose thread	CPC® coupling adapter	1¼″ female socket / pipe thread	1″ female socket / pipe thread valve	1″ female socket / pipe thread union / dump valve	¾″ male hose barb
00HC-0093	¾″ male garden hose thread	CPC® coupling adapter	1¼″ female socket / pipe thread	1″ female socket / pipe thread valve	1″ female socket / pipe thread union / dump valve	¾″ male hose barb
00HC-0095	¾″ male garden hose thread	CPC® coupling adapter	1¼″ female socket / pipe thread	1″ female socket / pipe thread valve	1″ female socket / pipe thread union / dump valve	¾″ male hose barb
00HC-0097	¾″ male garden hose thread	CPC® coupling adapter	1½″ female socket / pipe thread	1½″ female socket / pipe thread valve	1½″ female socket / pipe thread union	¾″ male hose barb
0185-8000	¾″ male garden hose thread	N/A	1″ female socket / pipe thread valve	1″ female socket / pipe thread valve	¾″ female pipe thread elbow	Overflow w/ ¾″ male hose barb

3.5 Electrical Safety and Supply Requirements

Pump Models	Electrical Supply	Operation
Grundfos® CME 5-3	(1) 1 Phase, 208-230V - 10/+ 6%, 50/60Hz, 1100W / 6.7-5.6A	Pump power
Grundfos® CME 10-2	(1) 3 Phase, 200-240V - 10/+ 6%, 50/60Hz, 2200W / 7.9-6.6A	Pump power
Grundfos® SCALA2 3-45	(1) 1 Phase, 110-120V, 50/60Hz, 550W /	Pump power

Overvoltage and undervoltage may occur in case of unstable power supply or a faulty installation. The motor is stopped if the voltage falls outside the permissible voltage range. The motor restarts automatically when the voltage is again within the permissible voltage range. Therefore, no additional protection relay is required.

If the upper load limit is exceeded, the motor automatically compensates for this by reducing the speed and stops if the overload condition persists. The motor remains stopped for a set period. After this period, the motor automatically attempts to restart. The overload protection prevents damage to the motor. Consequently, no additional motor protection is required.

The electronic unit has a built-in temperature sensor as an additional protection. When the temperature rises above a certain level, the motor automatically compensates for this by reducing the speed and stops if the temperature keeps rising. The motor remains stopped for a set period. After this period, the motor automatically attempts to restart.

Three-phase motors must be connected to a power supply with a quality corresponding to IEC 60146-1-1, class C, to ensure correct motor operation at phase unbalance.

NOTE: The following information pertains to CME pump models only.

A blade or service disconnect isn't provided. It must be installed. The pump must be connected to an external all-pole mains switch with a contact separation of at least 3 mm in each pole according to IEC 364.

If the pump is connected to an electric installation where an earth leakage circuit breaker is used as additional protection, this circuit must be marked with the following symbol:

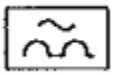

When selecting an earth leakage circuit breaker, the total leakage current of all the electrical equipment in the installation must be accounted for. Earth leakage current < 3.5 mA., (in accordance with EN 60 355-1). No external motor protection is required, as the pumps are overvoltage-protected. Standard as well as quick-blow or slow-blow fuses may be used.

WARNING: **All electric supply circuits to the pump must be disconnected and the electrical panel properly locked and tagged out before working inside the pump terminal box. Never**

attempt to make any connections inside the pump terminal box until the electrical supply has been turned off for at least five minutes. The pump must be earthed and protected against indirect contact in accordance with national regulations. Protective earth conductors must always have a yellow/green (PE) or yellow/green/blue (PEN) color marking. If the supply cable is damaged, it must be replaced by the manufacturer, the manufacturer's service partner, or a similarly qualified person, in order to avoid a hazardous condition.

3.6 Feedwater

Quality: RO permeate / Softened
Temperature (max): 113°F

3.7 Performance

Models	Pressure Relief Valve Adjustment Range / Pre-Set Value (PSI)	Flow Meter Range (GPM)	Spray Nozzle	Tank Vent Filter
00HC-0090-PRV	0-50 / @20	N/A	(2) 20.5GPM @ 30PSI	0.2 micron
00HC-0091	5-100 / @20	5-40	(1) 42GPM @ 40PSI	
00HC-0093	5-100 / @20	5-40	(1) 42GPM @ 40PSI	
00HC-0095	5-100 / @20	5-40	(1) 42GPM @ 40PSI	
00HC-0097	5-100 / @20	0-80	(2) 42GPM @ 40PSI	
0185-8000	0-50 / @20	N/A	(2) 20.5GPM @ 30PSI	

3.8 Environment

Parameter	Limits
Room storage and operating temperature range	40-113°F
Relative humidity	95% maximum
Maximum altitude	11,483ft (3,500m)
Transport and storage temperature	-40°F to 140°F (Dry unit)

3.9 Classification and Standards Applied

Pump Models	Approvals
Grundfos® SCALA2 3-45	UL Recognized Component
Grundfos® CME 5-3	UL Recognized Component
Grundfos® CME 10-2	UL Recognized Component

4 Pump Controls

4.1 Grundfos® CME Pump Controls

Applicable models may contain a pump with a “standard control panel” or “advanced control panel” as shown in Figure 1 and Figure 2 below. The “standard control panel” will require a Bluetooth dongle (AMW PN 97-0003) to make changes to the pump set point. Pumps with the “advanced control panel” utilize a display that will allow settings to be modified directly on the pump.

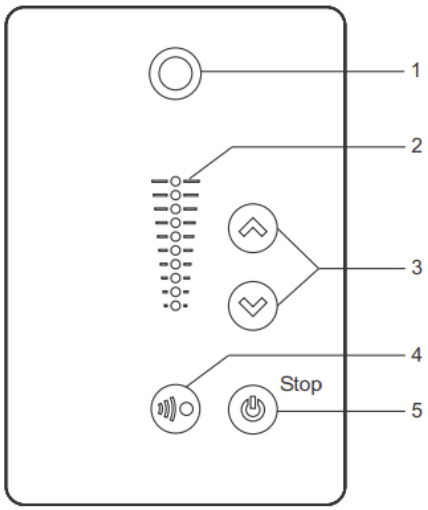

Figure 1 - CME Standard Control Panel

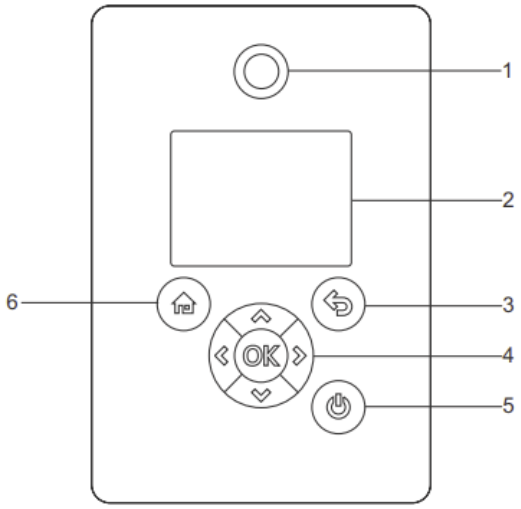

Figure 2 - CME Advanced Control Panel

To identify which control panel you may have, use the following methods:

- Grundfos® GO: You can identify the control panel in the "Fitted modules" menu under "Status". The pump is designed for wireless radio or infrared communication with Grundfos® GO, a mobile application. Grundfos® GO enables setting of functions and gives access to status overviews, technical product information and actual operating parameters. Grundfos® GO offers the following mobile interfaces (MI).
    - Grundfos® MI 204: Add-on module enabling radio or infrared communication. You can use MI 204 in conjunction with an Apple iPhone or iPod with Lightning connector, such as fifth generation or later iPhone or iPod. MI 204 is also available together with an Apple iPod touch and a cover.
    - Grundfos® MI 301: Separate module enabling radio or infrared communication. You can use the module in conjunction with an Android or iOS-based smart device with Bluetooth connection.
- Pump display: For pumps fitted with the advanced control panel, you can identify the control panel in the "Module type" menu under "Status".
- Motor nameplate: You can identify the fitted control panel on the motor nameplate.
    - HMI 200: Standard control panel
    - HMI 300: Advanced control panel

For standard control panels, the functions of the control panel are described in the table below (reference Figure 1 for Position number):

Pos.	Symbol	Description
1		**Grundfos® Eye:** This shows the operating status of the pump. See Section 4.1.1 for more information.
2		**LED Indicator:** Light fields for indication of a setpoint.
3		**Up and Down Arrows:** Buttons used to change values.
4		**Wireless Signal:** This allows radio communication with Grundfos® GO and other products of the same type. When attempting to establish radio communication between the pump and Grundfos® GO or another pump, the green indicator light in Grundfos® Eye on the pump flashes continuously. Press on the pump control panel to allow radio communication with Grundfos® GO and other products of the same type.

5		**Power:** This makes the pump ready for operation or starts and stops the pump. *Start:* If the button is pressed when the pump is stopped, the pump only starts if no other functions with higher priority have been enabled. *Stop:* If the button is pressed when the pump is running, the pump always stops. The "Stop" text next to the button is on.

For advanced control panels, the functions of the control panel are described in the table below (reference Figure 2 for Position number):

Pos.	Symbol	Description
1		**Grundfos® Eye:** This shows the operating status of the pump. See Section 4.1.1 for more information.
2		**Graphical Colour Display:** Displays information and menus
3		**Back Button:** Returns user to previous menu
4		**Left and Right Arrows:** With these buttons, the user can navigate between main menus, displays and digits. When the menu is changed, the display always shows the top display of the new menu.
		Up and Down Arrows: Buttons used to change values. Additionally, these buttons you can navigate between submenus.
	OK	**OK:** Saves changed values, resets any alarms and expands the value field. It also enables radio communication with Grundfos® GO and other products of the same type. When you try to establish radio communication between the pump and Grundfos® GO or another pump, the green indicator light in Grundfos® Eye flashes. A note also appears in the pump display stating that a wireless device wants to connect to the pump. Press on the pump control panel to allow radio

		communication with Grundfos® GO and other products of the same type.
5		**Power:** This makes the pump ready for operation or starts and stops the pump. *Start:* If the button is pressed when the pump is stopped, the pump only starts if no other functions with higher priority have been enabled. *Stop:* If the button is pressed when the pump is running, the pump always stops. The "Stop" text next to the button is on.
6		**Home:** This button returns the user to the main menu.

4.1.1 Grundfos® CME Eye

The operating condition is indicated by the Grundfos® Eye.

Grundfos Eye	Indication	Description
	No lights are on.	The power is off. The pump is not running.
	The two opposite green indicator lights are rotating in the direction of rotation of the pump when seen from the non-drive end.	The power is on. The pump is running.
	The two opposite green indicator lights are permanently on.	The power is on. The pump is not running.
	One yellow indicator light is rotating in the direction of rotation of the pump when seen from the non-drive end.	Warning. The pump is running.
	One yellow indicator light is permanently on.	Warning. The pump is stopped.
	The two opposite red indicator lights flash simultaneously.	Alarm. The pump is stopped.
	The green indicator light in the middle flashes quickly four times.	This is a feedback signal which the pump gives in order to ensure identification of itself.
	The green indicator light in the middle flashes continuously.	Grundfos GO or another pump is trying to communicate with the pump. Press on the pump control panel to allow communication.
	The green indicator light in the middle is permanently on.	Remote control with Grundfos GO via radio. The pump is communicating with Grundfos GO via radio connection.
	The green indicator light in the middle flashes quickly while Grundfos Go is exchanging data with the pump. It takes a few seconds.	Remote control with Grundfos GO via infrared light. The pump is receiving data from Grundfos GO via infrared communication.

Figure 3 - Grundfos® Eye Indicators

4.2 Grundfos® SCALA2 Pump Controls

The SCALA2 pump has an intelligent controller with the following integrated features: speed-controlled drive, tank, sensors, and non-return valves.

To prevent motor burnout, the SCALA2 pump will stop automatically under the following conditions: running dry, water shortage, excessive temperature, or blocked pump. The pump has an automatic reset function, allowing the pump to attempt to restart in five-minute intervals up to 8 times after an alarm occurs, then every 24 hours after that.

Figure 4 – SCALA2 Control Panel

Symbol	Description
	**Grundfos Eye** This shows the operating status of the pump. See Section 4.2.1 for more information.
	**ON / OFF button** This makes the pump ready for operation or starts and stops the pump.
	**UP / DOWN button** Buttons used to increase or decrease the outlet pressure.
	**RESET button** Button used to reset alarms.
	**Pressure indicator** Indicates the required outlet pressure. See section 4.2.2 for more information
	**Stop indicator** Indicates that the pump has been stopped manually.
	**Lock indicator** Indicates that the operating panel is locked.

1	**Indicator 1** Power supply failure.
2	**Indicator 2** The pump is blocked, for instance the shaft seal has seized up.
3	**Indicator 3** Leakage in the system.
4	**Indicator 4** Dry running or water shortage. Pump must be reset manually.
5	**Indicator 5** The maximum pressure has been exceeded or the setpoint cannot be reached.
6	**Indicator 6** The maximum runtime has been exceeded.
7	**Indicator 7** The temperature is outside the range.

4.2.1 Grundfos® SCLAA2 Eye

The operating condition of the pump is indicated by the Grundfos® Eye. See **Figure 5** for a list of possible indications the pump.

Grundfos Eye	Indication	Description
	No lights are on.	The power is off. The pump is not running.
	Two opposite green indicator lights running in the direction of rotation of the pump.	The power is on. The pump is running.
	Two opposite green indicator lights at a 45 ° angle is the icon used throughout this document for pump running.	The power is on. The pump is running.
	Two opposite green indicator lights permanently on.	The power is on. The pump is not running.
	Two opposite red indicator lights flashing simultaneously.	Alarm. The pump has stopped.
	Two opposite red indicator lights is the icon used throughout this document for pump stopped.	Alarm. The pump has stopped.

Figure 5 - Grundfos® Eye Indicators

4.2.2 Pressure Indicator

The pressure indicator shows the required outlet pressure of the pump.

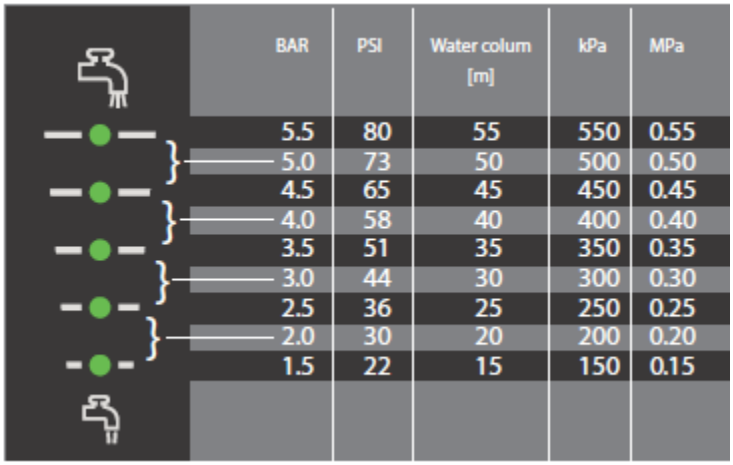

BAR	PSI	Water colum [m]	kPa	MPa
5.5	80	55	550	0.55
5.0	73	50	500	0.50
4.5	65	45	450	0.45
4.0	58	40	400	0.40
3.5	51	35	350	0.35
3.0	44	30	300	0.30
2.5	36	25	250	0.25
2.0	30	20	200	0.20
1.5	22	15	150	0.15

4.2.3 Expert Settings

The expert setting menu allows the installer to toggle between the following functions: self-learning, auto reset, anti cycling, and maximum continuous operating time.

To view or modify the Expert settings, proceed as follows:

1. Hold down the RESET button for 5 seconds.

2. Indicator 1 will start flashing to indicate that the expert settings are active.

The pressure indicator now acts as the expert menu. A flashing green diode is the cursor. Move the cursor using the UP/DOWN buttons, and toggle the selection on or off using the RESET button. The diode for each setting will light up when the setting is active.

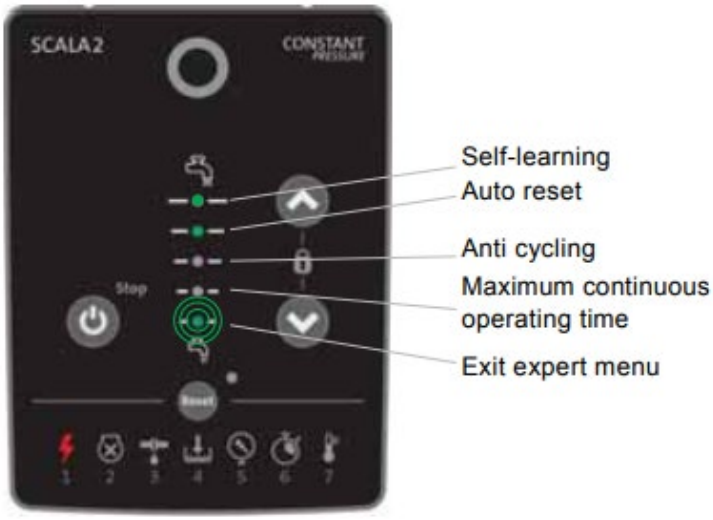

Function	Default	Description
Self-learning	On	**On** If the pump cannot reach the user-defined pressure setpoint, the self-learning function will automatically adjust the setpoint. The pump will lower the setpoint to either 65, 51, or 36 psi. The self-learned setpoint is indicated on the operating panel by one flashing green light. After every 24 hours, the pump will automatically attempt to revert to the original user-defined setpoint. If this is not possible, the pump will again return to the self-learned setpoint. The pump will continue to operate with the self-learning setpoint, until the user-defined setpoint can be reached. **Off** If you set the self-learning function to off and the pump is unable to reach the desired setpoint, the pump will show alarm 5.
Auto reset	On	**On** This function allows the pump to automatically check if the operating conditions are back to normal. If the operating conditions are back to normal, the alarm indication will be reset automatically. **Off** All alarms must be reset manually by means of the RESET button.
Anti cycling	Off	This function monitors the starts and stops of the pump. **Off** If the pump starts 40 times in a fixed pattern, there will be an alarm. The pump will remain in operation as normal. **On** If the pump starts and stops in a fixed pattern, there is a leakage in the system, and the pump will stop and show alarm 3.
Maximum continuous operating time	Off	This function is a timer that can turn off the pump if it runs continuously for 30 minutes. **Off** If the pump exceeds the running time of 30 minutes, the pump will run depending on the flow. **On** If the pump exceeds the running time of 30 minutes, the pump will stop after 30 minutes of continuous operation, and it will show alarm 6. This alarm will always need to be reset manually.

4.2.4 Resetting to Factory Settings

The pump can be reset to factory setting by pressing and holding the **DOWN** and **RESET** buttons simultaneously for 5 seconds.

4.3 Default Pump Settings

4.3.1 Grundfos® CME 5-3

The default program installed on the CME 5-3 pump is 999-3652. To change the setpoint settings please see sections 5.1.1 and 5.1.2.

Grundfos® 'GO' Program Setup			
Parameter	**Value**	**Parameter**	**Value**
Setpoint	94%	Analog Input 2	Not Active
Operating Mode	Normal	Digital Input 1	Ext Stop
Control Mode	Constant Curve	Digital Input/Output	
Pipe-Filling Function	Not Active	>Mode	Digital Input
Buttons On Product	Active	>Function If Input	Not Active
Stop Function	Not Active	>Function If Output	Not Active
Controller		Pulse Flowmeter	
>Kp	0.5 s	>Volume Per Pulse	0 ltr
>Ti	0.5 s	Predefined Set Point	Not Set
Operating Range		External Setpoint Function	Not Active
>Minimum	13%	Signal Relay 1	Not Active
>Maximum	100%	Signal Relay 2	Not Active
Ramps		Limit 1 Exceeded	
>Ramp Up Time	1.0 s	>Measured	Discharge Pressure
>Ramp Down Time	1.0 s	>Limit	52.0 PSI
Number	1	>Hysteresis Band	20.0 PSI
Radio Communication	Active	>Limit Exceeded When	Above Limit
Analog Input 1		>Action	Stop
>Function	Feedback Sensor	>Detection Delay	0 s
>Measured	Discharge Pressure	>Restart Delay	0 s
>Signal Type	4-20 mA	Limit 2 Exceeded	Not Active
>Sensor Unit	PSI	Standstill Heating	Not Active
>Minimum	0.0	Motor Bearing Monitor	Active
>Maximum	145.0		

4.3.2 Grundfos® CME 10-2

The default program installed on the CME 10-2 pump is 999-3667. To change the setpoint please see sections 5.1.1and 5.1.2.

Grundfos® 'GO' Program Setup			
Parameter	**Value**	**Parameter**	**Value**
Setpoint	93%	Analog Input 2	Not Active
Operating Mode	Normal	Digital Input 1	Ext Stop
Control Mode	Constant Curve	Digital Input/Output	
Pipe-Filling Function	Not Active	>Mode	Digital Input
Buttons On Product	Active	>Function If Input	Not Active
Stop Function	Not Active	>Function If Output	Not Active
Controller		Pulse Flowmeter	
>Kp	0.5 s	>Volume Per Pulse	0 ltr
>Ti	0.5 s	Predefined Set Point	Not Set
Operating Range		External Setpoint Function	Not Active
>Minimum	13%	Signal Relay 1	Not Active
>Maximum	100%	Signal Relay 2	Not Active
Ramps		Limit 1 Exceeded	
>Ramp Up Time	1.0 s	>Measured	Discharge Pressure
>Ramp Down Time	1.0 s	>Limit	60.0 PSI
Number	1	>Hysteresis Band	20.0 PSI
Radio Communication	Active	>Limit Exceeded When	Above Limit
Analog Input 1		>Action	Stop
>Function	Feedback Sensor	>Detection Delay	0 s
>Measured	Discharge Pressure	>Restart Delay	0 s
>Signal Type	4-20 mA	Limit 2 Exceeded	Not Active
>Sensor Unit	PSI	Standstill Heating	Not Active
>Minimum	0.0	Motor Bearing Monitor	Active
>Maximum	145.0		

4.3.3 Grundfos® SCALA2

The SCALA2 pump does not utilize a pump program. See section 4.2.

5 PROCESS DESCRIPTION

5.1 Theory of Operation

For CME pump models, the distribution pump will operate on a constant curve based on the run percentage "SETPOINT", any unused water will recirculate back to the storage tank (see sections 5.1.1and 5.1.2. to adjust the "SETPOINT"). The tanks are equipped with a recirculation header that contains a pressure relief valve, spray bar, dump valve, pressure gauge, and sample port. The pressure relief valve works to maintain water pressure under its set-point. The spray bar returns water from the distribution loop back to the storage tank using spray nozzles to prevent stagnant water.

The CME pump models are equipped with four float switches: high-level, mid-level, low-level, and base-level. The high, mid, and base-level float switches are close on rise and the low-level is open on rise. The high and mid-level floats tie into the RO. The high-level float closing turns off the RO, while the mid-level float opening turns the RO on to request more water. The low-level float closing triggers the alarm panel to signal that the tank is running low on water. The base-level float connects to the CME distribution pump to act as a kill switch to prevent the pump from operating when there is no water (running dry).

All CME pump models provided from AmeriWater have been factory set to control mode “Controlled” (see paragraph below) and have been programmed to operate on a constant curve at the rated flow mentioned previously. These models also use a pressure transducer to monitor the discharge pressure during operation. The transducer allows the pump to recognize when the pump is operating under a dead head condition (no water usage). Under this condition, the pump will shut off based on a maximum pressure limit allowed at the pump discharge. To increase or decrease the speed at which the pump operates, follow steps outlined in Sections 5.1.1 and 5.1.2. The number of starts and stops via the power supply must not exceed four times per hour. When switched on via the power supply, the pump starts after approximately five seconds.

NOTE: All changes to setpoints are possible with the pump operating.

In control mode “Controlled,” the pump will adjust its performance, i.e., pump discharge pressure, to the desired set point for the control parameter. In control mode “Uncontrolled,” the pump will operate according to the constant curve set.

For SCALA2 pump models, the pump operates to keep a constant pressure. Meaning the pump starts automatically when water is used and stops when it is not. These models have two float switches, high and mid-level, that are close on rise. The high and mid-level floats tie into the RO. The high-level float closing turns off the RO, while the mid-level float opening turns the RO on to request more water. The SCALA2 pump models have a pressure gauge, pressure relief valve, and a spray bar to allow the option of recirculation. If using recirculation with this pump, assure fresh water is cycled in periodically to offset the temperature buildup. The pressure relief valve works to maintain water pressure under its set-point. The spray bar returns water from the distribution loop back to the storage tank using spray nozzles to prevent stagnant water.

5.1.1 Adjusting Setpoints on the Standard Control Panel

1. Connect Bluetooth dongle to Bluetooth-capable smartphone.

2. Download “Grundfos GO” application from IOS App Store or Google Play Store.

3. Open “Grundfos GO” application and select “Connect” in the IR menu. Point the Bluetooth dongle toward pump motor. The green light at top of the pump should flash green.

4. Once connected, the pump dashboard will display on the screen. Navigate to “Settings.”

NOTE: All the settings from the tables in sections 4.3.1 and 4.3.2 and more can be adjusted from the “Settings” screen.

5. Scroll down until “Limit 1 Exceeded” is displayed

6. Select “Measured” and use the menu to select “Not active.” This will deactivate the dead head shutoff function of the pump.

7. Use the arrow at the top left hand corner of the display to return to the previous menu. Scroll up until “Set Point” is displayed. Change the percentage displayed until the desired pump speed is achieved. The percentage displayed directly controls the operating speed of the pump (i.e. set point of 90% will operate the pump at 90% of the maximum speed).

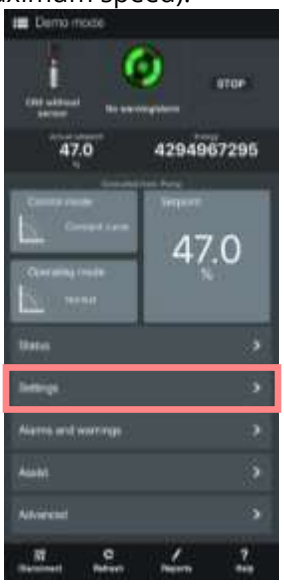

8. With the set point determined, navigate back to “Limit 1 Exceeded.”

9. Select “Limit” and set the value to approximately one PSI above the operating pressure with the tank filled to the high level float.

10. Return to the previous menu and select “Measured” and set this to “Discharge Pressure.”

11. The pump shall now operate with no surging during operation. Shut the ball valve located after the pump discharge and verify that the pump shuts off at dead head.

NOTE: If the pump begins switching on and off after setting the shutoff limit, navigate to Limit 1 Exceeded → Limit and increase the shut off pressure in 0.1PSI increments until the pump functions as intended.

12. Open the discharge valve and return the system to normal operation.

5.1.2 Adjusting Setpoints on the Advance Control Panel

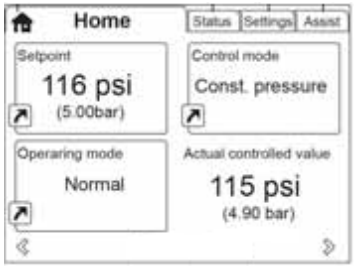

1. Press the “OK” button on the controller to wake the screen. The home screen will be displayed on the pump.

2. Use the ◄ & ► keys to scroll over until the settings menu appears.

NOTE: All the settings from the tables in sections 4.3.1 and 4.3.2 and more can be adjusted from the “Settings” menu.

3. Use the ▼ key to scroll through the settings menu until “Monitoring Functions” is displayed. Press the “OK” key to enter the menu.

4. Use the ▼ key to select “Limit-Exceeded Function”. Press the “OK” key to enter the menu.

5. Use the “OK” key to enter the “Measured” menu. Scroll up to “Not Active”and use the “OK” key to disable the dead head shutoff function.

NOTE: This setting should be turned back on after making the necessary changes to the pump operating speed. Failure to turn the setting on will lead to dry running of the pump on dead end loop systems. This may cause the pump to overheat.

6. Use the back button to return to the settings menu.

7. Use the ▲ key to scroll up until the “Set Point” setting is displayed. Press the “OK” key to enter the set point menu.

8. Press the “OK” key to modify the set point. Use the arrow keys to set the set point to the desired value. The percentage displayed directly controls the operating speed of the pump (i.e. setpoint of 90% will operate the pump at 90% of the maximum speed).

9. Use the back button to return to the settings menu. Scroll to “Monitoring Function” using the ▼ key. Press the “OK” key to enter the menu.

10. Use the ▼ key to scroll down to “Limit-Exceeded Function”. Press the “OK” key to enter the menu.

11. Use the ▼ key to select “Limit” and adjust the limit to approximately one PSI over the operating point of the pump at the new speed using the arrow keys.

12. Use the back button to return to the “Limit-Exceeded Function” menu. Use the ▲ key to select “Measured”. Press OK to enter the menu.

13. Select “Discharge Pressure” from the menu.

14. The pump shall now operate with no surging during operation. Shut the ball valve located

after the pump discharge and verify that the pump shuts off at dead head.

NOTE: If the pump begins switching on and off after setting the shutoff limit, navigate to Limit 1 Exceeded → Limit and increase the shut off pressure in one PSI increments until the pump functions as intended.

15. Open the discharge valve and return the system to normal operation.

5.2 RO Bypass Procedure

1. Turn off the POWER to the RO and Distribution Pump.

2. Shut off the water supply to the system.

3. Remove the RO water inlet hose from the source.

4. Retrieve the bypass hose and install to the incoming water supply.

5. Connect the CPC connector into the fitting just after the pump on the storage tank.

6. Turn on the water to begin bypass operation.

6 INSTALLATION & START-UP

This section provides the recommended method of installation for the unit.

6.1 Environment

The unit should be installed in a clean and dry, indoor, non-hazardous, ventilated environment (see Section 3.8).

6.2 Unpacking

WARNING: **When transporting the unit either by pallet truck or by forklift observe the center of gravity markings and prevent from tipping.**

Ensure the ground is level and can take the loading of the unit when full.

With the unit in its final position, inspect for any damage. Ensure that the installation kit has been provided with unit; this installation kit should contain a box of unused fittings (e.g., additional union fittings) as well as bypass hose(s).

1. Locate the storage tank on a firm, level foundation. For seismic requirements, drill four 5/8" diameter holes into a concrete floor through the mounting holes in the storage tank feet with a minimum of 4" deep. Install the four provided 5/8" diameter HILTI® KB-TZ Expansion anchors through the four holes on the pads (tank feet) to anchor into the ground. A minimum of four threads for each anchor must be below the concrete prior to application of 60ft-lbs of torque.

6.3 Electrical Supply

Refer to Section 3.5.

6.4 Water Connections

Refer to Section 3.4.

6.5 Drain

A suitable, unrestricted, drain is required, capable of handling water equivalent to tank volume.

6.6 Commissioning

Commissioning of the unit should only be carried out by either an AmeriWater technician or authorized trained personnel.

6.7 Start-up

6.7.1 Grundfos® CME Models

The CME pump models must be filled with liquid and vented before startup or if the pump has been drained. To do so:

1. Close the tank-to-pump valve and system outlet valve (refer to Section 9.4 for applicable models and respective locations of components).
2. Remove priming plug in the pump sleeve (see Figure 6).
3. Slowly open the tank-to-pump valve until a steady stream of liquid runs out of the priming port.
4. Replace priming plug and tighten securely.
5. Start the pump and slowly open the system outlet valve until fully open.
6. Completely open the tank-to-pump valve.

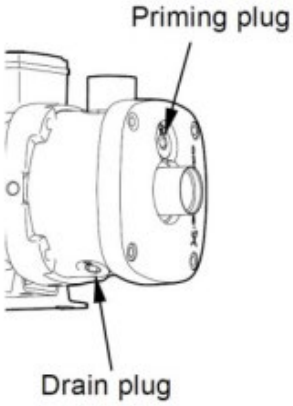

Figure 6 - CME Pump Priming

6.7.2 Grundfos® SCALA2 Models

1. Unscrew the priming plug and pour minimum 0.5 gallons of water into the pump housing.
2. Screw the priming plug on again.

CAUTION: Always tighten priming and drain plugs by hand.

3. Connect the 1 ¼" hose barb (inlet) to a water source and the 1" hose barb (outlet) to the water system with a hose and hose clamps.
4. Open a tap or sample port to prepare the pump for venting.
5. Connect the mains supply cable of the pump to the electricity supply. When the cable is connected, the Grundfos Eye should illuminate and the pump will start.
6. When water flows without air, close the tap or sample port.
7. Open the highest tapping point in the installation.
8. Adjust the pressure setpoint to the required pressure by means of the UP/DOWN buttons.
9. Close the tapping point. Startup has been completed

7 FAULT FINDING

CAUTION: **This section provides general details for diagnosing possible faults that may occur during normal operation. Some of the remedial actions can only be carried out by qualified personnel. Do not attempt to carry out any action if it involves inspecting / replacing an electrical / mechanical component without first contacting AmeriWater for advice. Please be aware that the unit / system may still be under pressure and contain water at scalding temperature under certain fault conditions. When investigating any alarm, take appropriate precautions to prevent possible injury. NEVER attempt to dismantle the unit under these conditions. Always contact AmeriWater for advice.**

7.1 Fault Finding Chart for Grundfos® CME Pump

Fault	Cause	Remedy
The pump does not start.	Insufficient water.	Check water supply / suction pipe.
	Overheating due to excessive liquid temperature.	Supply cooler liquid to pump.
	Overheating due to seized-up / choked-up pump.	Remove inlet and outlet piping and check for blockages.
	Too low / high supply voltage.	Check the supply voltage and correct the fault, if possible.
	No electric supply.	Connect the electric supply.
	No water consumption.	Open a tap. Check that the height between the top point of the discharge pipe and the pump does not exceed fifty feet.
	Pump is in alarm condition.	Reset the pump by means of the appropriate button (refer to Section 4.1).
The pump does not stop.	Existing pipework is leaking / defective.	Repair the pipework.
	Nonreturn valve is blocked / missing.	Clean the valve or fit a new nonreturn valve.
The pump cuts out during operation.	Dry running.	Check the water supply / suction pipe.
	Overheating due to excessive liquid temperature.	Supply cooler liquid to pump.
	Overheating caused by high ambient temperature, overloaded motor, and / or seized-up motor / pump.	Check current draw on motor. Check for binding of pump. Check adequate inlet water supply.

	Too low supply voltage.	Check the supply voltage and correct the fault, if possible.
The pump starts and stops too frequently.	Leakage in suction pipe or air in water.	Check the water and the supply/suction pipe.
The pump gives electric shocks.	Defective ground connection.	Connect the ground connection to the pump in accordance with local regulations.
External device notice.	Putting pump into stop mode	Pump must be reprogrammed. Toggle pump on and off via power button to avoid this problem.

7.2 Fault Finding Chart for Grundfos® SCALA2 Pump

Fault	Grundfos Eye	Indicator Light	Automatic Reset	Cause	Remedy
The pump is not running.		-	-	Power supply failure.	Switch on the power supply. Check the cables and cable connections for defects and loose connections and check for blown fuses in the electrical installation.
			Yes	The power supply is out of prescribed voltage range.	Check the power supply and the pump nameplate. Reestablish the power supply within the prescribed voltage range.
			No	The shaft seal has seized up or the pump is blocked by impurities	The end cover incorporates a plug which can be removed by means of a suitable tool. This makes it possible to deblock the pump shaft if it has seized up as a result of inactivity.
			Yes	Dry running.	Check the water source, and prime the pump.
			No	The maximum runtime has been exceeded.	Check the installation for leakage and reset the alarm.
			No	The internal non-return valve is defective or blocked in completely or partly open position.	Clean, repair or replace the non-return valve.
The pump is running.			-	1. Leakage from the pipe system, or the non-return valve is not properly closed due to impurities. 2. Small continuous consumption.	1. Check and repair the pipe system, or clean, repair or replace the non-return valve. 2. Check the taps and reconsider the usage pattern (ice machines, water evaporators for air-conditioning, etc.).
			-	The temperature of the pump and water is below 37 °F.	Consider protecting the pump and the installation against frost.

The pump performance is insufficient.		-	-	1. The pump inlet pressure is too low. 2. The pump is undersized. 3. The inlet pipe, the inlet strainer or the pump is partly blocked by impurities. 4. There is a leakage in the inlet pipe. 5. There is air in the inlet pipe or the pump. 6. The required outlet pressure is too low for the installation.	1. Check the inlet conditions of the pump. 2. Replace the pump with a bigger pump. 3. Clean the inlet pipe or the pump. 4. Repair the inlet pipe. 5. Prime the inlet pipe and the pump. Check the inlet conditions of the pump. 6. Increase the pressure setting (arrow up).
		7	Yes	The maximum temperature has been exceeded and the pump is running at reduced performance.	Check the cooling conditions. Protect the pump against direct sunlight or any nearby heat sources.
System overpressure.		5	Yes	1. The setpoint is set too high. The difference between the outlet pressure and the inlet pressure must not exceed 51 psi. 2. The maximum pressure has been exceeded, the inlet pressure is higher than 87 psi. 3. The maximum pressure has been exceeded. Equipment elsewhere in the system causes a high pressure at the pump, for example water heater or defective safety equipment.	1. Reduce the pressure to a new setpoint (maximum 51 psi + positive inlet pressure). 2. Check the inlet conditions. 3. Check the installation.
You can reset the pump, but it runs only for a few seconds.		4	Yes	1. Dry running or water shortage. 2. The inlet pipe is blocked by impurities. 3. The foot or non-return valve is blocked in closed position. 4. There is a leakage in the inlet pipe. 5. Air in the inlet pipe or the pump.	1. Check the water source, and prime the pump. 2. Clean the inlet pipe. 3. Clean, repair or replace the foot or non-return valve. 4. Repair the inlet pipe. 5. Prime the inlet pipe and the pump. Check the inlet conditions of the pump.
You can reset the pump, but it starts repeatedly, immediately after stopping.		3	No	1. The internal non-return valve is defective or blocked in completely or partly open position. 2. The tank precharge pressure is not correct.	1. Clean, repair or replace the non-return valve. 2. Adjust the tank precharge pressure to 70% of the required outlet pressure.

7.3 Fault Finding Chart for Storage Tank

Fault	Cause	Remedy
Water not entering tank.	Insufficient water.	Check water supply.
	"Tank fill" float switch stuck closed.	Turn off water supply. Drain tank. Unthread and inspect float switch. Attempt to unstick. If not possible, replace float switch.

Water does not leave tank.	Tank-to-pump valve closed.	Open valve to pump. Ensure drain valve is closed.
	Pump is not turned on.	Review startup procedures in Section 6.7.
Water continuously fills tank.	“Tank fill” float switch stuck open.	Turn off water supply. Drain tank. Unthread and inspect float switch. Attempt to unstick. If not possible, replace float switch.
Alarm panel reports a “low tank volume” alarm despite adequate water level.	“Alarm” float switch stuck open.	Check the water and the supply/suction pipe.
Alarm panel does not report a “low tank volume” alarm despite adequate water level.	“Alarm” float switch stuck closed	Turn off water supply. Drain tank. Unthread and inspect float switch. Attempt to unstick. If not possible, replace float switch.
Pump will not run despite meeting nominal operating conditions.	“Pump shut off” float switch stuck closed.	Turn off water supply. Drain tank. Unthread and inspect float switch. Attempt to unstick. If not possible, replace float switch.
Pump runs dry despite meeting nominal operating conditions.	“Pump shut off” float switch stuck open.	Turn off water supply. Drain tank. Unthread and inspect float switch. Attempt to unstick. If not possible, replace float switch.
Tank overflowing.	“Tank fill stop” stuck open.	Turn off water supply. Drain tank. Unthread and inspect float switch. Attempt to unstick. If not possible, replace float switch.

7.4 Alarms and Events

If the pump does not start when the fault has been corrected, or if the fault cannot be corrected, contact AmeriWater or Grundfos for further information.

As mentioned in Section 4.1.1, the alarm indicator light will be shown, as well as the “Status” tab in the “Home” menu of applicable models. The alarm conditions are also listed in the pump’s alarm log. The pump will not resume operation until the alarm has been reset. After supply failure, the pump will automatically revert to its previous operating condition.

8 DISINFECTION & CLEANING

AmeriWater recommends that all storage tanks should be disinfected monthly. Additionally, the system should be disinfected if: it has not been used for 24 hours; after a boil water advisory has been lifted; there has been any disconnection in the system between the utility feed water and the storage tank; or any repairs or maintenance performed on the system. The following sections will outline the disinfection steps. Refer to the Association for the Advancement of Medical Instrumentation (AAMI) ST108 for AAMI standards for disinfection.

8.1 Storage Tank / Loop Disinfection

WARNING: **Ensure no equipment is connected in a manner outlined for its intended use. Chemicals in the disinfection process are highly toxic and require the system to be isolated from use until completion.**

Since the storage tank contains a spray device installed in the top of the tank, it washes down the top and sides of the tank. This enables the water level in the tank to be lowered during disinfection, which reduces the chemicals required and reduces the rinse out time.

1. Determine the volume of water in the tank and loop. The length of the loop can be estimated by measuring the general path of the loop in the facility, then adding 50% more length for safety. Below is a chart showing the number gallons in various sizes of pipe. Example: 450 feet of 1” pipe; 450 / 24 = 18.75 gallons. Add the loop volume (gallons) to the volume in the storage tank. If you have a 185-gallon tank without a spray device, use the full 185 gallons. With a spray device, use less of the volume (185 / 4 = 46.25 for a tank that is ¼ full or the lowest level for that allows the tank to function). Example: 46.25 gallons + 18.75 gallons from the loop = 65 gallons.

Pipe Size (NPT)	FEET OF PIPE TO CONTAIN 1 GAL OF WATER
½”	98
¾”	43
1”	24
1¼”	15
1½”	10

2. Prior to disinfecting system loop, ensure disinfection is necessary by taking bacteria and endotoxin samples at various system sample ports. If bacteria and endotoxin levels do not meet the requirements listed in the table below, or it is a period in which the loop has not been frequently used (such as initial installation), it is required that the system loop be disinfected. Refer to the table below for more information.

Type of Water		Utility Water			Critical Water
Water Use		Flushing	Washing	Rinse	All
Bacteria	cfu/mL	N/A	N/A	<10	<10
Endotoxin	EU/mL	N/A	N/A	<20	<10

3. Determine the dilution and amount of chemical to use. The following are the recommended dosages of chlorine, PAA (Peracidin, Minncare), and ozone for disinfection. Choose a disinfectant compatible with the loop material of construction.

Chemical	Instructions
Chlorine	500 PPM. Dilute one (1) gallon of chlorine bleach in 100 gallons of water in the system. Based on the example on the previous page: 65 gallons / 100 = 0.65 gallons of bleach. Add to the system by removing the tank lid and pouring in the chlorine bleach solution.
PAA	500 PPM. Dilute one (1) gallon PAA in 100 gallons of water in the system. Based on the example on the previous page: 65 gallons / 100 = 0.65 gallons of PAA. Add to the system by removing the tank lid and pouring in the PAA solution.
Ozone	0.5 PPM. Add to the system by running the ozone disinfection system until the desired level is reached. Hold at this level for at least 10 minutes. Reference Ozone manual, 98-0121, for disinfection steps.

4. Verify that the disinfectant is present at the connections to the loop (each point of use).

5. Disconnect inlet connections from storage tank.

6. Recirculate the disinfectant in the loop via distribution pump until it is verified at each point of use that the above requirements have been met.

7. Turn off the distribution pump and allow the disinfectant to soak inside the loop for one hour. Replace connection to storage tank after adequate time has passed.

8. Turn the distribution pump back on, ensuring the dump valve on the loop return is opened and the spray bar isolation valve is closed. Drain remaining disinfectant from the tank when the pump is off. Empty the tank entirely via tank dump valve.

9. Fill the storage tank enough to recirculate and rinse the loop via the spray bar fixed to the storage tank (loop return dump valve closed and spray bar isolation valve opened).

10. Continue rinsing and dumping the system until all disinfectant is rinsed out by verifying at each usage point. Use a chlorine test strip to verify the residual chlorine level or a PAA test strip to verify the residual PAA level. Repeat this step until the test strip indicates a residual level at or below 1.0 ppm chlorine and PAA.

8.2 Surface Cleaning

When cleaning the exterior surfaces of the device, it is recommended that you use a soft non-marking cloth dampened with water. Do not use chemical cleaning agents. If it is necessary to use a chemical cleaning agent, contact AmeriWater for permission prior to use.

9 MAINTENANCE

WARNING: **Only approved spare parts provided by AmeriWater are to be used. If unauthorized spare parts are supplied or fitted this could invalidate the warranty guarantee, affect the unit's performance or compromise the safe operation of the unit.**

Maintenance on the unit should be carried out by trained technician. It is recommended that should any fault occur with the unit that it is reported to the appropriate party responsible for maintaining the water treatment system.

9.1 Storage Tank Vent Filter Replacement

NOTE: The filter for the tank vent should be replaced after one year, or visible signs of moisture are seen – whichever comes first.

1. Ensure entire system is shut off and no water is circulating.
2. Locate filter housing atop storage tank; this is the transparent piece that holds the filter.
3. Unscrew the filter housing and set aside.
4. Remove old filter from housing and replace with new filter. Contact AmeriWater for a replacement; the part number can be found in Section 9.4.7.
5. Firmly replace filter housing and resume system operation.

9.2 Storage Tank Lid O-Ring

NOTE: Throughout the life of the O-ring, damage can result such as pinching, sticking, or tearing. It is important that the O-ring be inspected each time the tank lid is removed to ensure quality.

1. Ensure entire system is shut off and no water is circulating.
2. Locate tank lid atop storage tank.
3. Unscrew the lid and locate O-ring.
4. Inspect the O-ring for visible damage, such as cracks.
    a. If no such damage exists, ensure the O-ring is properly lubricated with lubricant designated for O-rings to prevent sticking.
    b. If damage exists, contact AmeriWater for a replacement; the part number can be found in Section 9.4.7.
5. Firmly replace O-ring, tank lid, and resume system operation.

9.3 Distribution Pump

9.3.1 Grundfos® CME Pump

NOTE: Under normal operating conditions, the pump is maintenance-free. However, it is recommended to keep the pump clean.

WARNING: **Do not remove the pressure tank from the pump unless it has been vented. Never touch the electronics unless the pump has been switched off for at least five minutes.**

- Keep the motor cooling fins and fan blades clean to ensure sufficient cooling of the motor and electronics.
- The motor bearings are of the closed type and greased for life. The bearings cannot be re-lubricated.

9.3.2 Grundfos® SCALA2 Pump

It is recommended to periodically check and clean the non-return valves and to keep the SCALA2 pump clean, including keeping the ventilation holes free of dust.

The pump has a debris filter to protect the pump. The filter is placed on the bottom and can easily be removed and cleaned with a stiff brush. Clean the debris filter once a year or as needed.

To remove the inlet or outlet non-return valve, follow the steps below:

1. Turn off the power supply and disconnect the power plug.
2. Shut off the water source.
3. Open a tap to release the pressure in the pipe system.
4. Close the isolating valves and/or drain the pipes.
5. Gradually open and remove the priming plug.
6. Remove the drain plug and drain the pump.
7. Unscrew the union nut holding the inlet connection.
Depending on the installation type, it may be necessary to remove the pipes from both the inlet and outlet connections.
8. Pull out the inlet connection.
9. Pull out the inlet and outlet non-return valve.
10. Clean the non-return valve with warm water and a soft brush.
11. Assemble the components in reverse order.

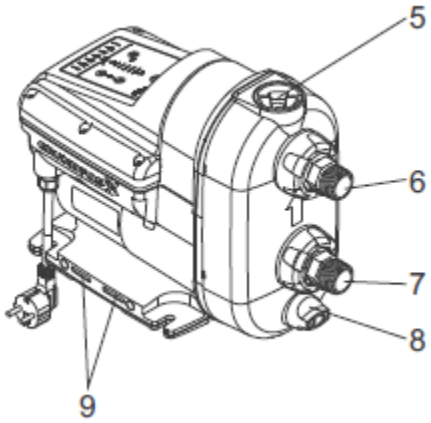

9.4 Component Identification and Spare Parts

9.4.1 00HC-0090-PRV Models

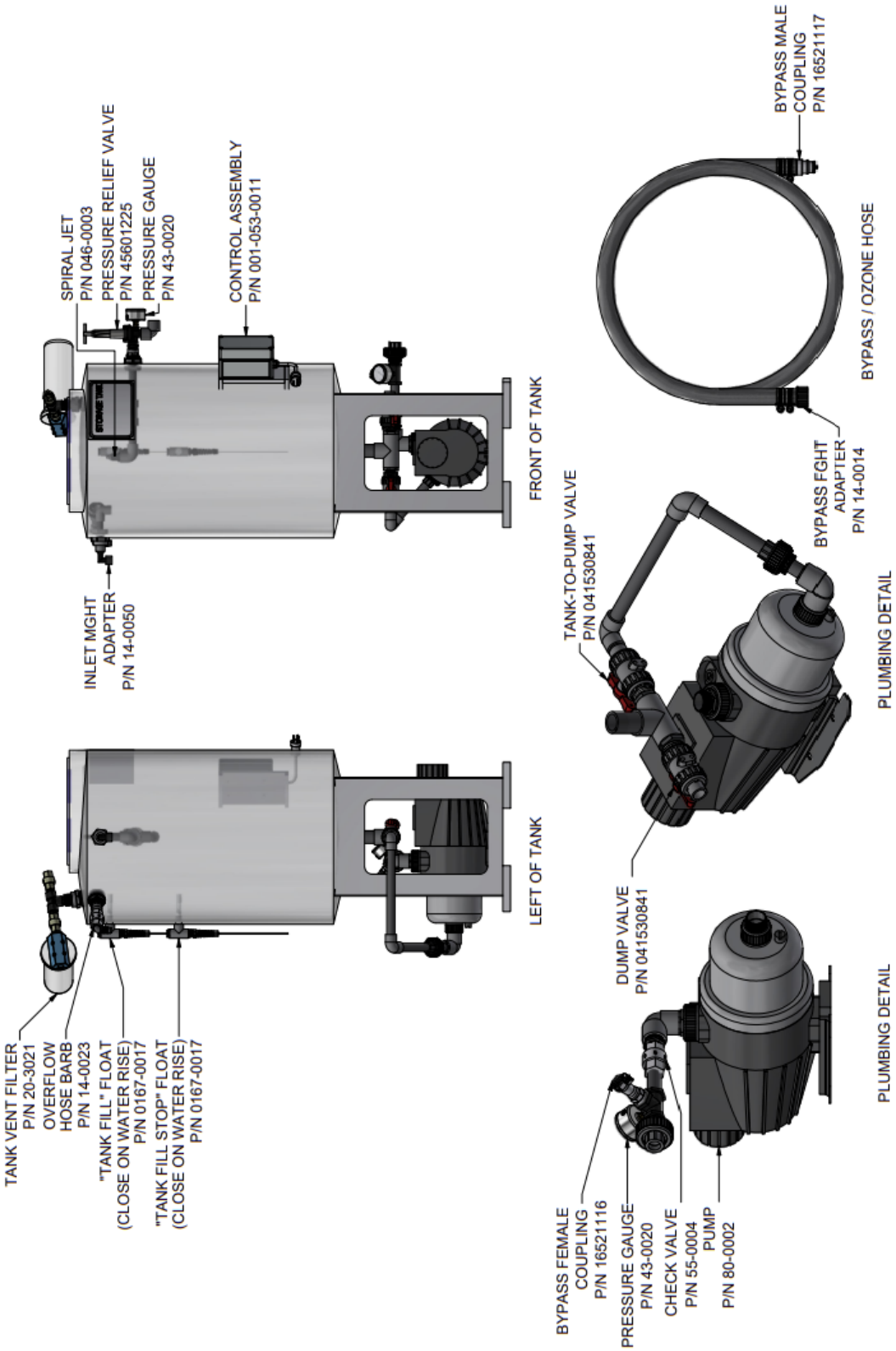

9.4.2 00HC-0091 Models

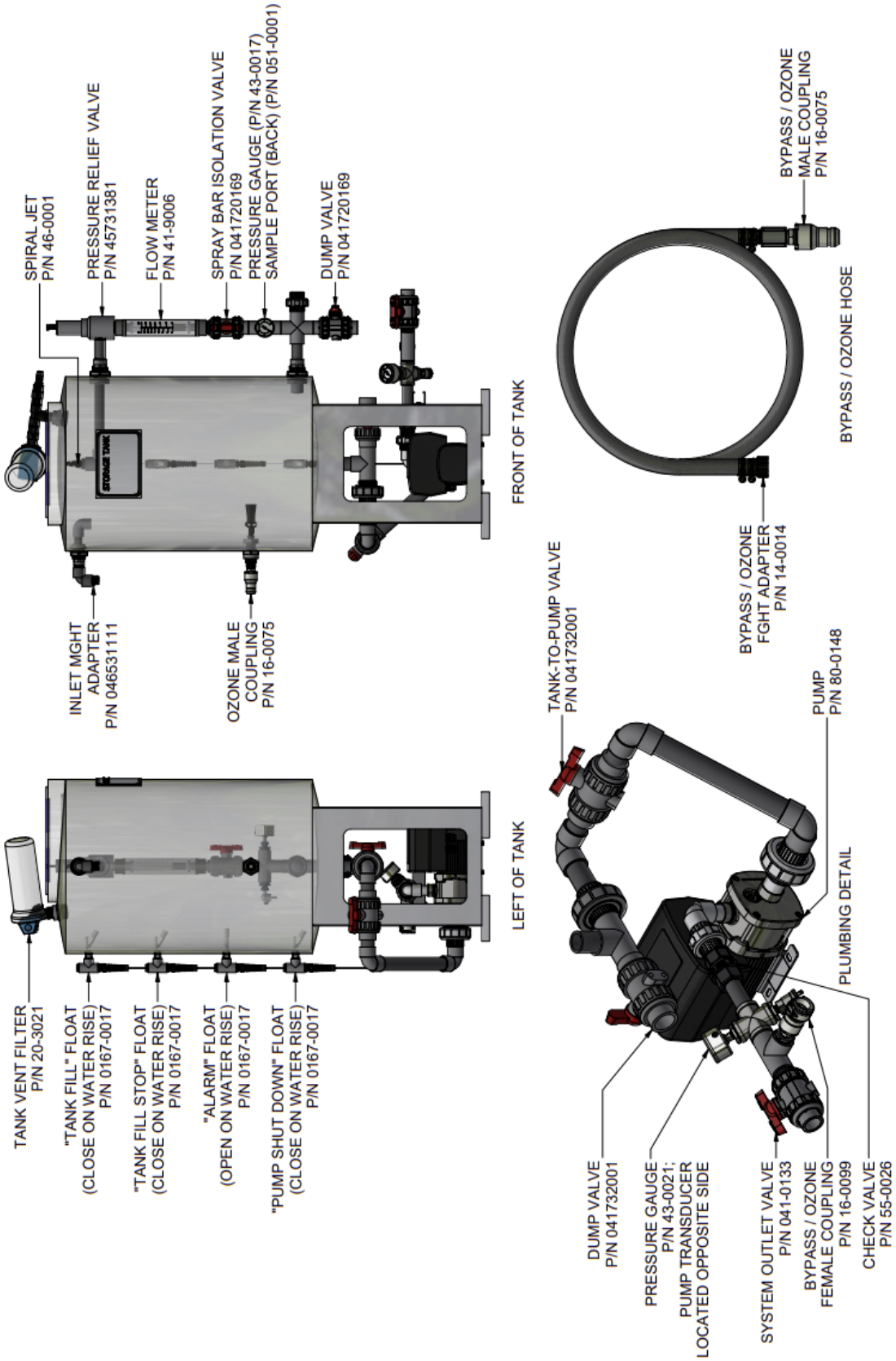

9.4.3 00HC-0093 Models

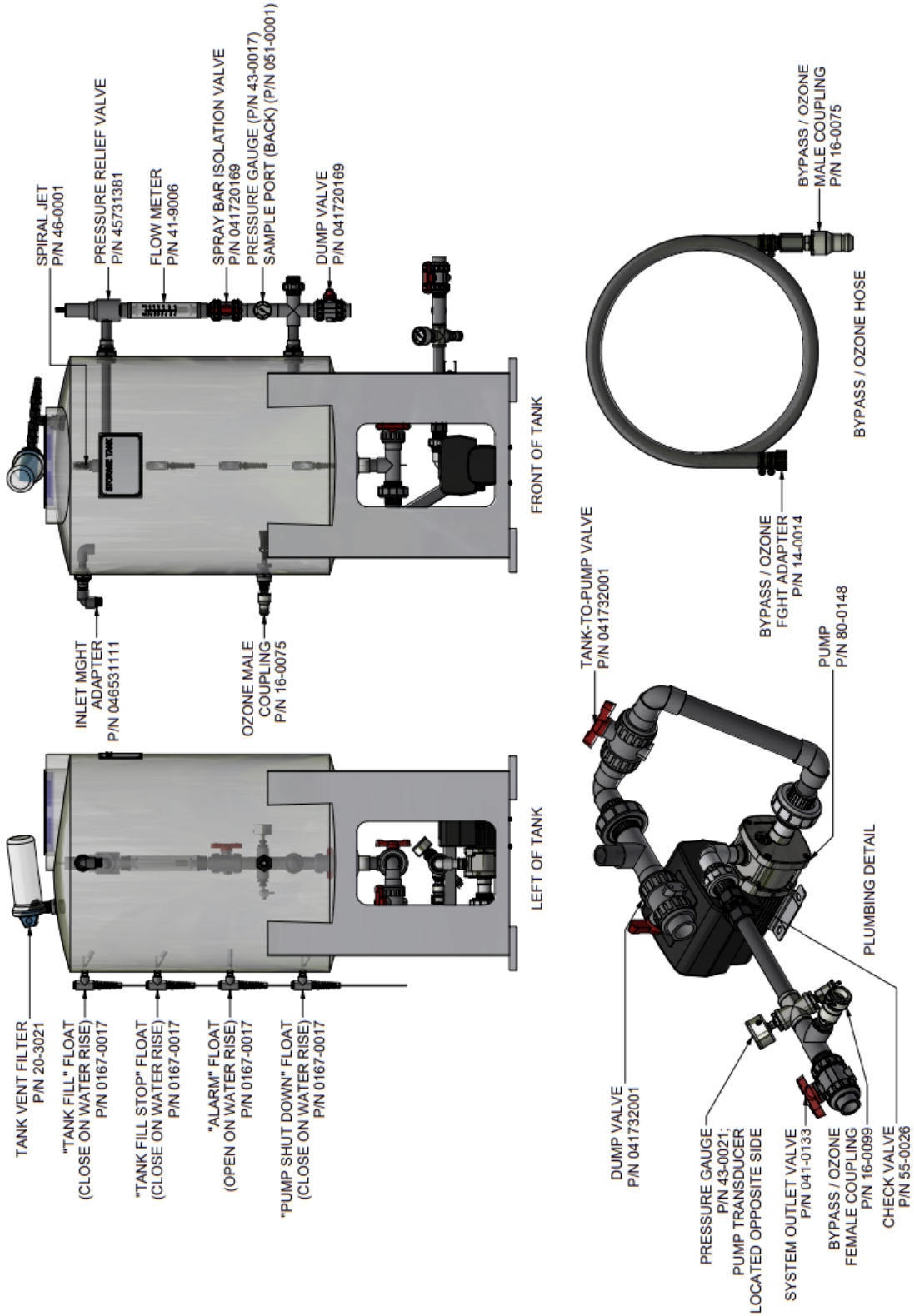

9.4.4 00HC-0095 Models

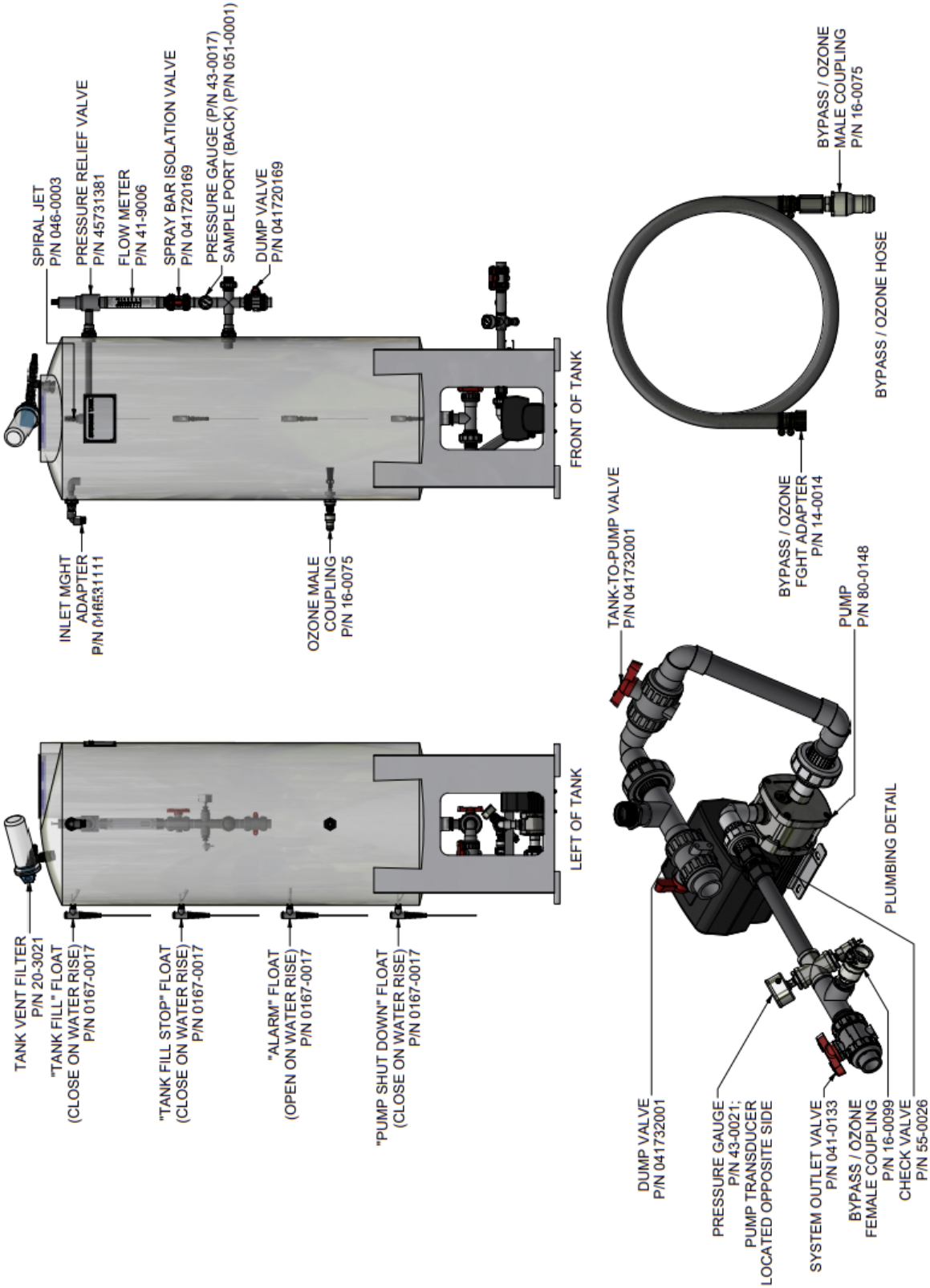

9.4.5 00HC-0097 Models

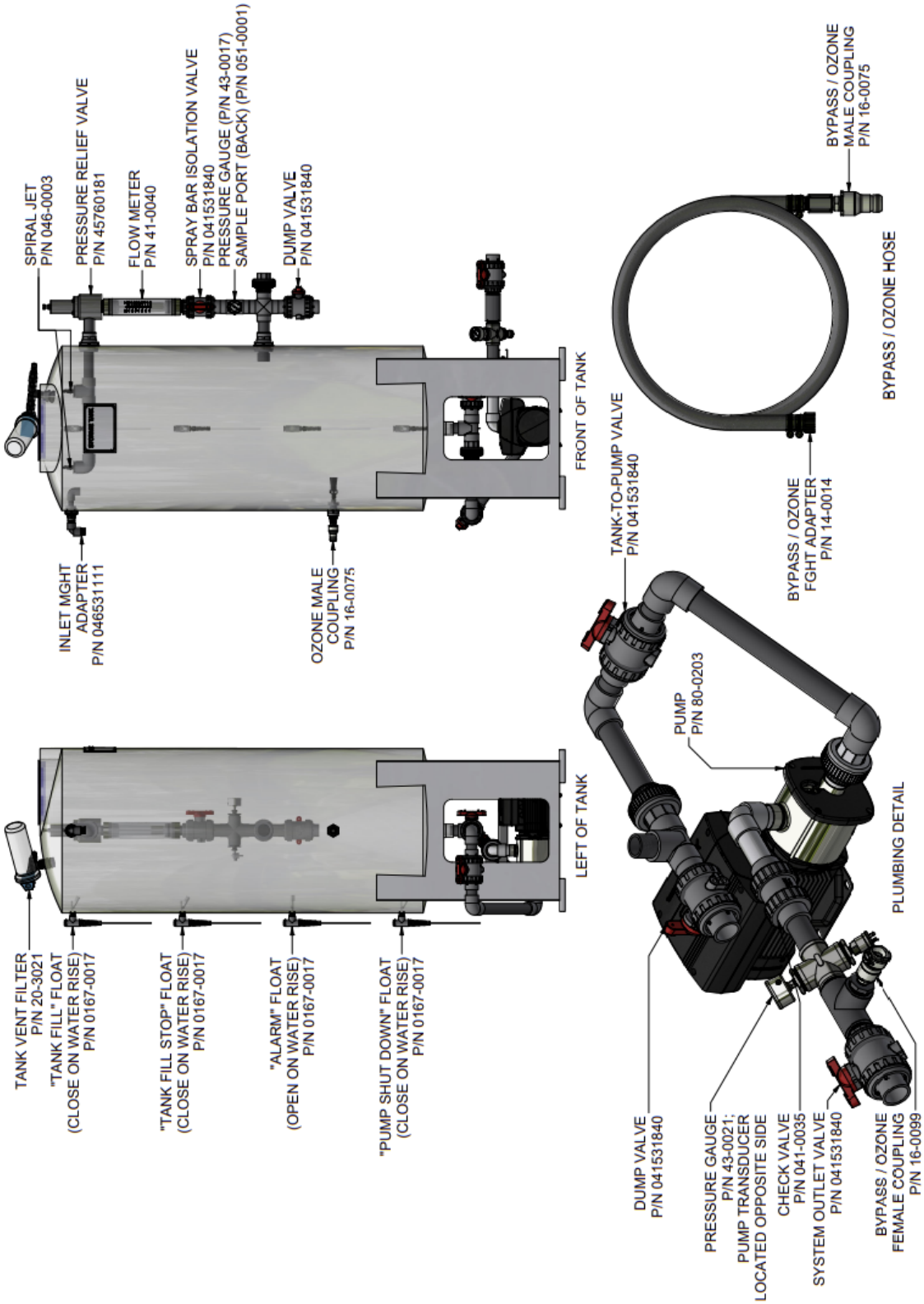

9.4.6 0185-8000 Models

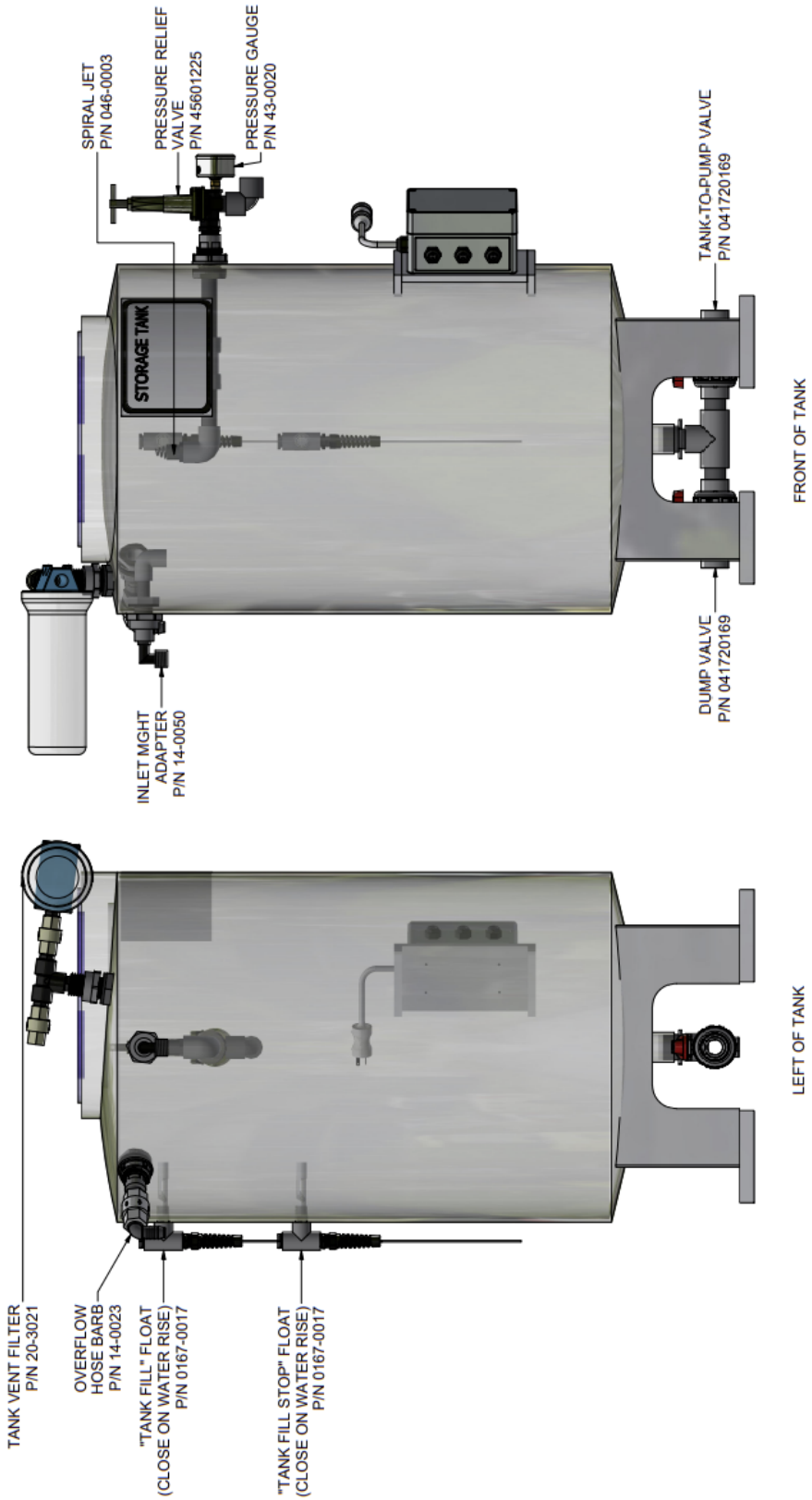

9.4.7 Replacement Parts List

AmeriWater uses in-house part numbers to identify components. Some replacement parts are separated from parts used on units and are for customer service requests in the event a component fails, and a replacement is requested. Contact AmeriWater for more information.

Refer to the table below for a list of applicable replacement parts.

AmeriWater P/N	Description
911-0002	PUMP, REPLACEMENT, GRUNDFOS, CME5-3, 208-230V
911-80-0203	PUMP, REPLACEMENT, GRUNDFOS, CME10-2, 208-230V
R167-0017	FLOAT SWITCH, REPLACEMENT, ASSEMBLY, 10' CABLE
13-1075	O-RING, 10.75"x.139", EPDM
85-0063	LID, TANK, 12” GAMMA SEAL, BLUE
21530234	O-RING,FLTR,HSG,#10 & #20 "SLIMLINE",.50 I/O,NO PR, 222 20 & 10”
001-085-0035	TANK, ASSEMBLY, VENT FILTER, 00HC-00/91/93/95/97 MODELS
0185-0070	TANK, ASSEMBLY, VENT FILTER, 00HC-0090-PRV / 0185-8000 MODELS

10 APPENDIX

10.1 Disposal of Electrical Parts

Disposal of the unit or any electrical component from the unit must be in accordance with local requirements in your province or state for the disposal of electrical waste (E-Waste).

10.2 Flow Diagrams

10.2.1 00HC-0090-PRV Models

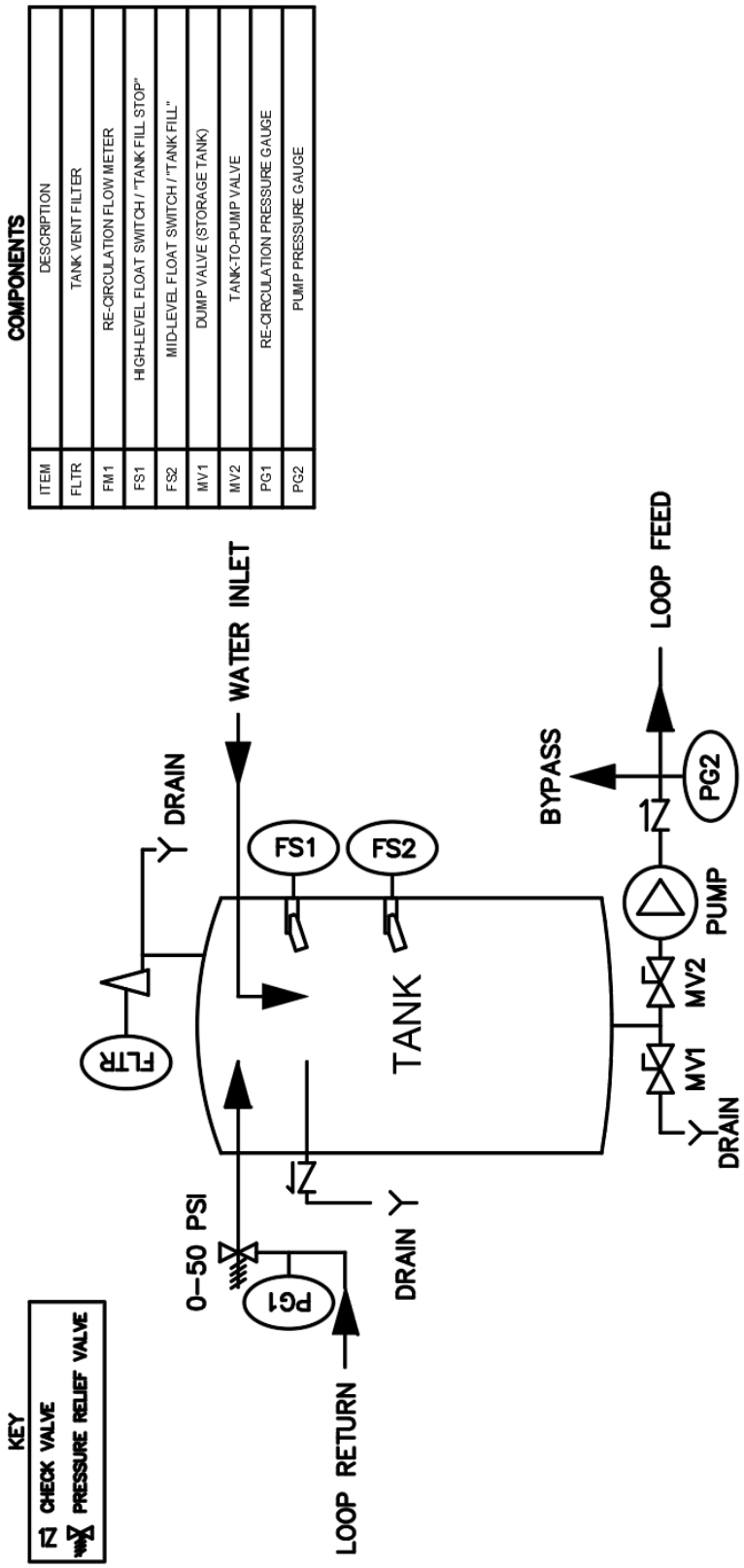

10.2.2 00HC-0091/93/95/97 Models

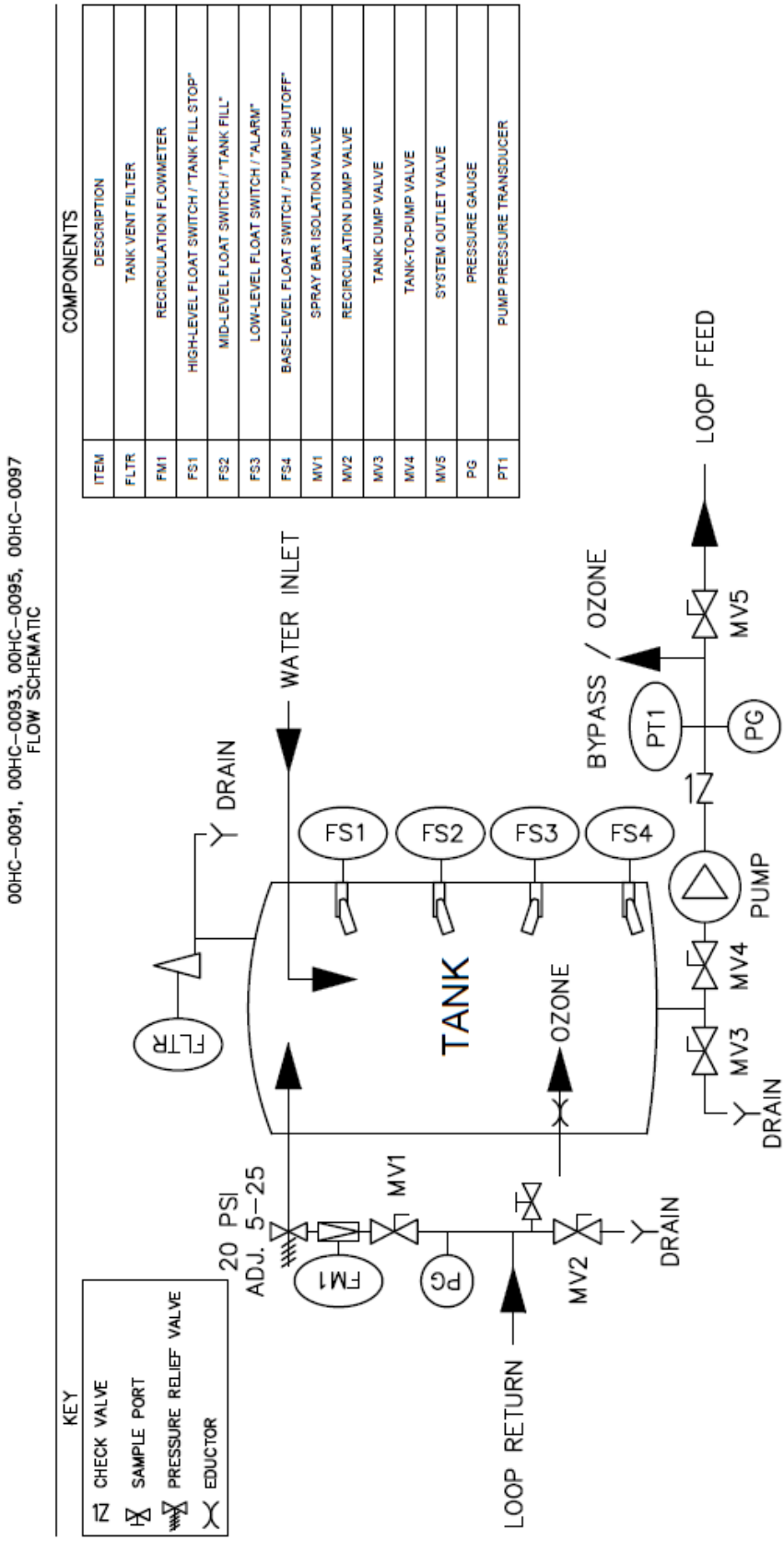

10.2.3 0185-8000 Models

COMPONENTS

ITEM	DESCRIPTION
FLTR	TANK VENT FILTER
FMI	RE-CIRCULATION FLOW METER
FS1	HIGH-LEVEL FLOAT SWITCH / "TANK FILL STOP"
FS2	MID-LEVEL FLOAT SWITCH / "TANK FILL"
MV1	TANK DUMP VALVE
MV2	SYSTEM OUTLET VALVE
PG1	RE-CIRCULATION PRESSURE GAUGE
PG2	PUMP PRESSURE GAUGE

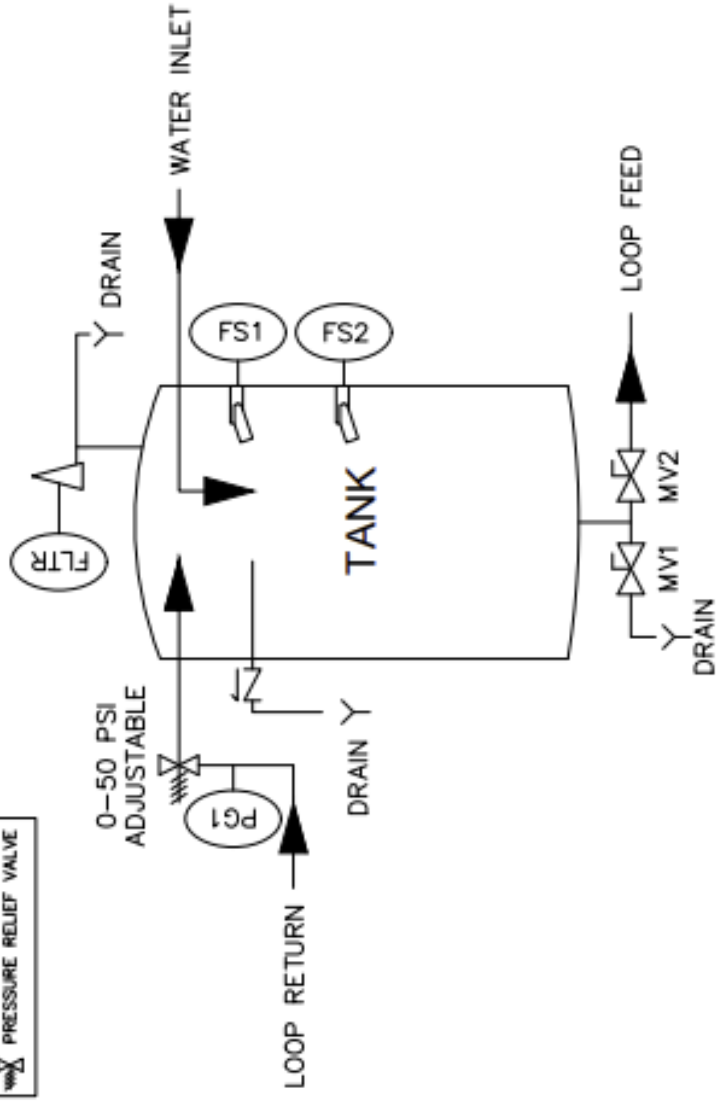

10.3 Wiring Diagram

NOTE: For wiring diagrams related to the optional AmeriWater healthcare alarm panel (P/N 00HC-0019) or healthcare reverse osmosis devices (P/N 00HC-0015/45/60/75 and 00HCRO3X402), refer to their respective manuals and documentation.

10.3.1 00HC-0091/93/95 Models

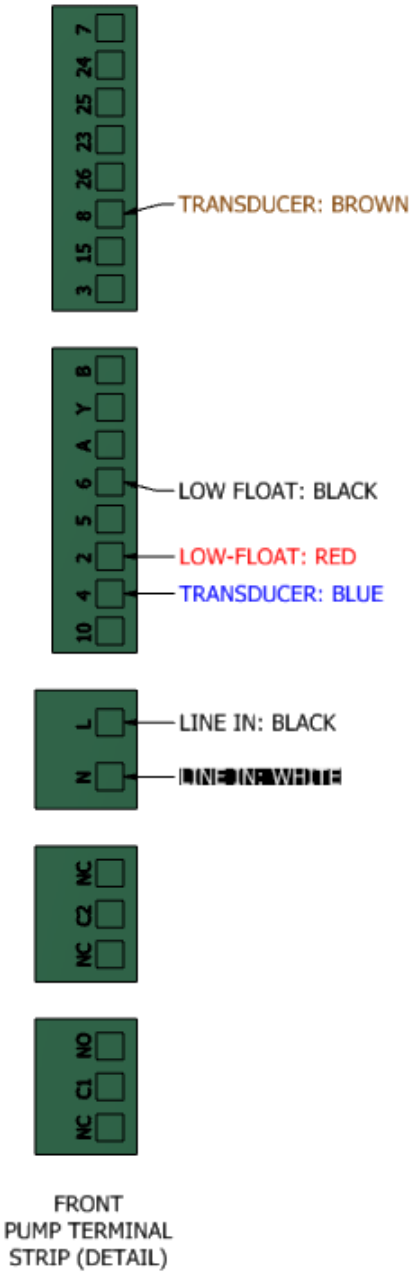

10.3.2 00HC-0097 Models

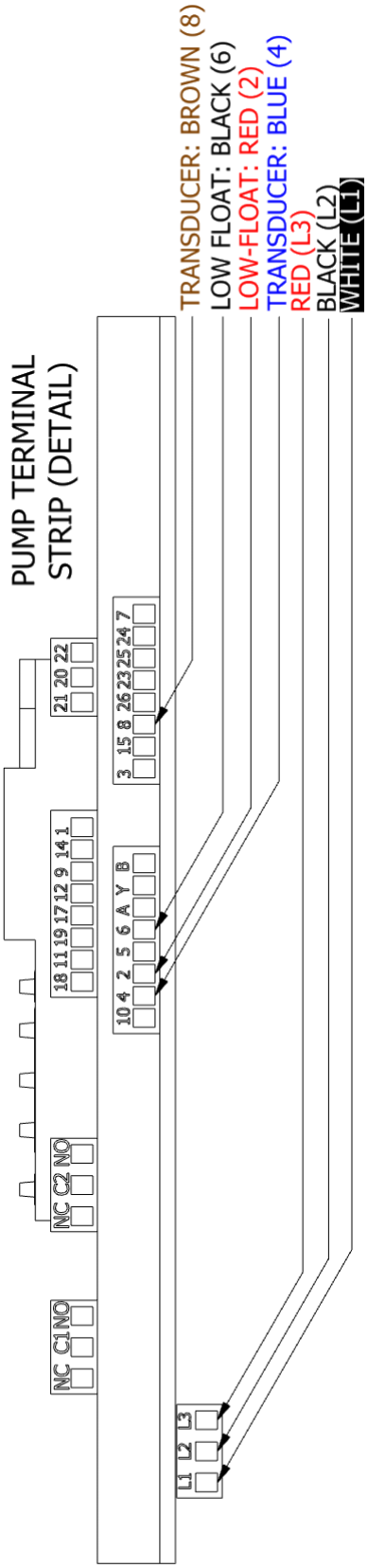

10.3.3 00HC-0090-PRV and 0185-8000 Control Panels

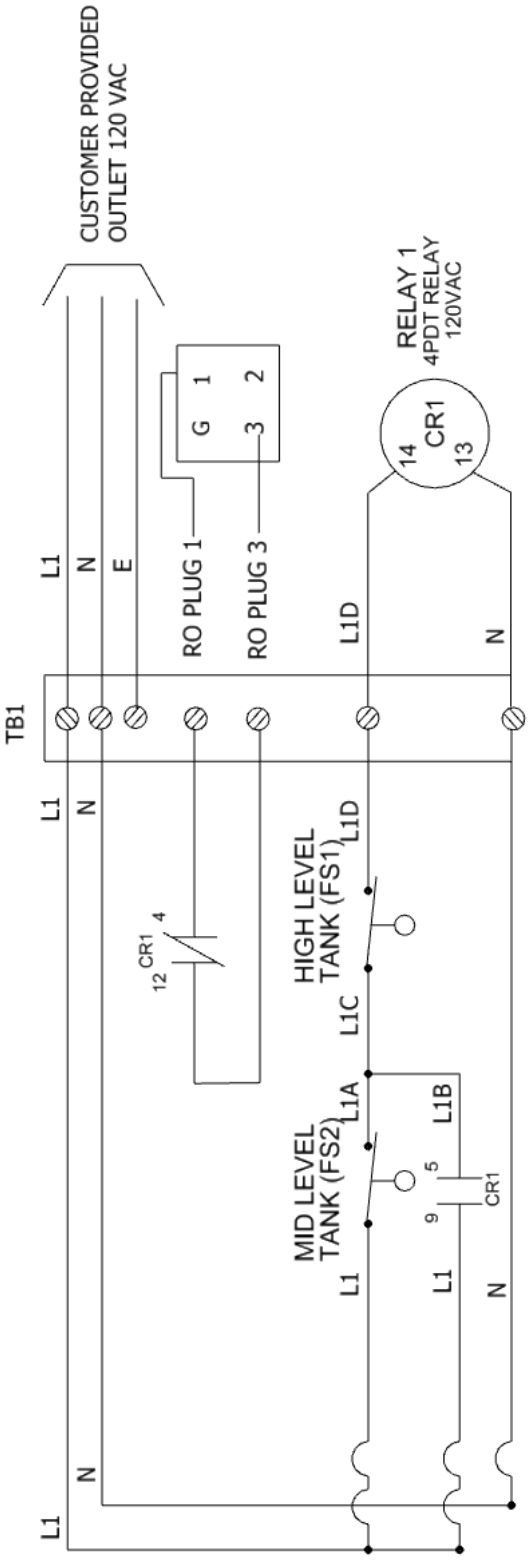

CALIFORNIA PROPOSITION 65

⚠ WARNING

This product can expose you to chemicals such as vinyl chloride (used in the production of PVC) or Nickel (used in the production of stainless-steel), that are known to the State of California to cause cancer. For more information go to www.P65Warnings.ca.gov.

Dear Valued Customer,

California Proposition 65 (Prop 65) is the Safe Water and Toxic Enforcement Act of 1986. The State of California began enforcing amendments to California Prop 65 at the end of August 2018. Prop 65 requires manufacturers to provide a clear and reasonable warning to residents of California about chemicals used in products that they purchase that are included on the Prop 65 Chemical List. The chemicals included on the list are chemicals that are known to the State of California to cause cancer, birth defects, or other reproductive harm. One such chemical is Vinyl Chloride, a compound used to produce Polyvinyl Chloride (PVC). The AmeriWater system you have purchased may contain PVC or stainless-steel parts.

While warnings are only required in the State of California, AmeriWater has initiated the use of Prop 65 labeling for all products to ensure compliance with California regulations. Please note that the above warning does not necessarily mean that the product that you have purchased is unsafe. Products that have been cleared for market by FDA have been determined to be safe and effective by the United States Food and Drug Administration. The warning is simply a requirement by the State of California. If you wish to obtain additional information, please visit: p65warnings.ca.gov. You may also contact your AmeriWater representative if you have any questions.

Thank you for your understanding and we look forward to continuing to serve you.